BLF 5.08HC/03/270F SN BK BX

Weidmüller Interface GmbH & Co. KG
Klingenbergstraße 26
D-32758 Detmold
Germany

www.weidmueller.com

Product image



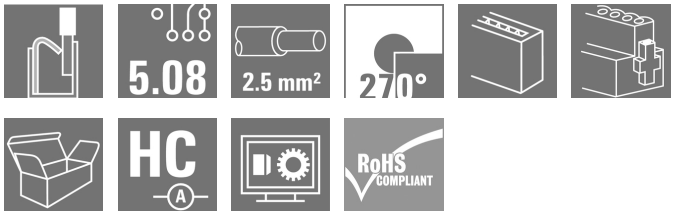

Just as reliable as the millionfold proven original and featuring innovative details:
The BLF 5.08HC PUSH IN version of the BLZP 5.08HC female connector is not only different in terms of connection system; it also has a more compact design. Weidmüller's innovative PUSH IN spring connection system stands for the future of easy and tool-free wire connection. HC = High Current.
In terms of versatility, the BLF 5.08HC offers just as much as the version which served as a model:

- 3 tested-and-proven wire outlet directions provide the usual flexibility for application-specific design
- 4 flange variations and the patented release latch allow the locking concept to be based on the requirements of the user
- Use the BLF 5.08HC and SL 5.08HC plug combination to reach the max. rated specifications

General ordering data

Version	PCB plug-in connector, female plug, 5.08 mm, Number of poles: 3, 270°, PUSH IN with actuator, Clamping range, max. : 3.31 mm², Box
Order No.	1982130000
Type	BLF 5.08HC/03/270F SN BK BX
GTIN (EAN)	4032248686223
Qty.	72 pc(s).
Product data	IEC: 400 V / 24 A / 0.2 - 2.5 mm² UL: 300 V / 18.5 A / AWG 26 - AWG 12
Packaging	Box

BLF 5.08HC/03/270F SN BK BX

Weidmüller Interface GmbH & Co. KG
Klingenbergstraße 26
D-32758 Detmold
Germany

www.weidmueller.com

Technical data

Dimensions and weights

Depth	26.2 mm	Depth (inches)	1.031 inch
Height	20.6 mm	Height (inches)	0.811 inch
Width	25.04 mm	Width (inches)	0.986 inch
Net weight	8.111 g		

System Parameters

Product family	OMNIMATE Signal - series BL/SL 5.08
Type of connection	Field connection
Wire connection method	PUSH IN with actuator
Pitch in mm (P)	5.08 mm
Pitch in inches (P)	0.2 inch
Conductor outlet direction	270°
Number of poles	3
L1 in mm	10.16 mm
L1 in inches	0.4 inch
Number of rows	1
Pin series quantity	1
Rated cross-section	2.5 mm²
Touch-safe protection acc. to DIN VDE 57 106	Safe from finger touch
Touch-safe protection acc. to DIN VDE 0470	IP20 plugged/ IP10 unplugged
Protection degree	IP20
Volume resistance	≤5 mΩ
Can be coded	Yes
Stripping length	10 mm
Screwdriver blade	0.6 x 3.5
Screwdriver blade standard	DIN 5264
Plugging cycles	25
Plugging force/pole, max.	7 N
Pulling force/pole, max.	5.5 N
Tightening torque	Torque type: Screw flange Usage information: Tightening torque: min. 0.2 Nm; max. 0.25 Nm

Material data

Insulating material	PBT	Colour	black
Colour chart (similar)	RAL 9011	Insulating material group	IIIa
Comparative Tracking Index (CTI)	≥ 200	UL 94 flammability rating	V-0
Contact material	CuSn	Contact surface	tinned
Layer structure of plug contact	4...8 µm Sn hot-dip tinned	Storage temperature, min.	-40 °C
Storage temperature, max.	70 °C	Operating temperature, min.	-50 °C
Operating temperature, max.	100 °C	Temperature range, installation, min.	-30 °C
Temperature range, installation, max.	100 °C		

Conductors suitable for connection

Clamping range, min.	0.13 mm²
Clamping range, max.	3.31 mm²
Wire connection cross section AWG, min.	AWG 26
Wire connection cross section AWG, max.	AWG 12

BLF 5.08HC/03/270F SN BK BX

Weidmüller Interface GmbH & Co. KG
Klingenbergstraße 26
D-32758 Detmold
Germany

www.weidmueller.com

Technical data

Solid, min. H05(07) V-U	0.2 mm²		
Solid, max. H05(07) V-U	2.5 mm²		
Flexible, min. H05(07) V-K	0.2 mm²		
Flexible, max. H05(07) V-K	2.5 mm²		
w. plastic collar ferrule, DIN 46228 pt 4, min.	0.25 mm²		
w. plastic collar ferrule, DIN 46228 pt 4, max.	2.5 mm²		
w. wire end ferrule, DIN 46228 pt 1, min.	0.25 mm²		
w. wire end ferrule, DIN 46228 pt 1, max.	2.5 mm²		
Plug gauge in accordance with EN 60999 a x b; ø	2.8 mm x 2.0 mm		
Clampable conductor	Cross-section for conductor connection	Type	fine-wired
		nominal	0.5 mm²
	wire end ferrule	Stripping length	nominal 12 mm
		Recommended wire-end ferrule	H0,5/16 OR
		Stripping length	nominal 10 mm
		Recommended wire-end ferrule	H0,5/10
	Cross-section for conductor connection	Type	fine-wired
		nominal	0.75 mm²
	wire end ferrule	Stripping length	nominal 12 mm
		Recommended wire-end ferrule	H0,75/16 W
		Stripping length	nominal 10 mm
		Recommended wire-end ferrule	H0,75/10
	Cross-section for conductor connection	Type	fine-wired
		nominal	1 mm²
	wire end ferrule	Stripping length	nominal 12 mm
		Recommended wire-end ferrule	H1,0/16D R
		Stripping length	nominal 10 mm
		Recommended wire-end ferrule	H1,0/10
	Cross-section for conductor connection	Type	fine-wired
		nominal	1.5 mm²
	wire end ferrule	Stripping length	nominal 10 mm
		Recommended wire-end ferrule	H1,5/10
		Stripping length	nominal 12 mm
		Recommended wire-end ferrule	H1,5/16 R
	Cross-section for conductor connection	nominal	2.5 mm²
	wire end ferrule	Stripping length	nominal 10 mm
		Recommended wire-end ferrule	H2,5/10
		Stripping length	nominal 13 mm
		Recommended wire-end ferrule	H2,5/16DS BL
Reference text	The outside diameter of the plastic collar should not be larger than the pitch (P), Length of ferrules is to be chosen depending on the product and the rated voltage.		

BLF 5.08HC/03/270F SN BK BX

Weidmüller Interface GmbH & Co. KG
Klingenbergstraße 26
D-32758 Detmold
Germany

www.weidmueller.com

Technical data

Rated data acc. to IEC

tested acc. to standard	IEC 60664-1, IEC 61984	Rated current, min. number of poles (Tu=20°C)	24 A
Rated current, max. number of poles (Tu=20°C)	19 A	Rated current, min. number of poles (Tu=40°C)	21 A
Rated current, max. number of poles (Tu=40°C)	16.5 A	Rated voltage for surge voltage class / pollution degree II/2	400 V
Rated voltage for surge voltage class / pollution degree III/2	320 V	Rated voltage for surge voltage class / pollution degree III/3	250 V
Rated impulse voltage for surge voltage class/ pollution degree II/2	4 kV	Rated impulse voltage for surge voltage class/ pollution degree III/2	4 kV
Rated impulse voltage for surge voltage class/ contamination degree III/3	4 kV	Short-time withstand current resistance	3 x 1s with 120 A

Rated data acc. to CSA

Institute (CSA)		Certificate No. (CSA)	200039-1121690
Rated voltage (Use group B / CSA)	300 V	Rated voltage (Use group D / CSA)	300 V
Rated current (Use group B / CSA)	10 A	Rated current (Use group D / CSA)	10 A
Wire cross-section, AWG, min.	AWG 12	Wire cross-section, AWG, max.	AWG 26
Reference to approval values	Specifications are maximum values, details - see approval certificate.		

Rated data acc. to UL 1059

Institute (cURus)		Certificate No. (cURus)	E60693
Rated voltage (Use group B / UL 1059)	300 V	Rated voltage (Use group D / UL 1059)	300 V
Rated current (Use group B / UL 1059)	18.5 A	Rated current (Use group D / UL 1059)	10 A
Wire cross-section, AWG, min.	AWG 26	Wire cross-section, AWG, max.	AWG 12
Reference to approval values	Specifications are maximum values, details - see approval certificate.		

Packing

Packaging	Box	VPE length	349 mm
VPE width	136 mm	VPE height	30 mm

Type tests

Test: Durability of markings	Standard	DIN EN 61984 section 7.3.2 / 09.02 taking pattern from DIN EN 60068-2-70 / 07.96
	Test	mark of origin, type identification, pitch, type of material, date clock
	Evaluation	available
	Test	durability
	Evaluation	passed

Weidmüller

BLF 5.08HC/03/270F SN BK BX

Weidmüller Interface GmbH & Co. KG
Klingenbergstraße 26
D-32758 Detmold
Germany

www.weidmueller.com

Technical data

Test: Misengagement (Non-interchangeability)	Standard	DIN EN 61984 section 6.3 and 6.9.1 / 09.02, DIN EN 60512-13-5 / 11.08	
	Test	180° turned with coding elements	
	Evaluation	passed	
	Test	visual examination	
	Evaluation	passed	
Test: Clampable cross section	Standard	DIN EN 60999-1 section 7 and 9.1 / 12.00, DIN EN 60947-1 section 8.2.4.5.1 / 04.08	
	Conductor type	Type of conductor and conductor cross-section	solid 0.2 mm²
		Type of conductor and conductor cross-section	stranded 0.2 mm²
		Type of conductor and conductor cross-section	solid 2.5 mm²
		Type of conductor and conductor cross-section	stranded 2.5 mm²
		Type of conductor and conductor cross-section	AWG 26/1
		Type of conductor and conductor cross-section	AWG 26/19
		Type of conductor and conductor cross-section	AWG 14/1
		Type of conductor and conductor cross-section	AWG 14/19
	Evaluation	passed	

Weidmüller

BLF 5.08HC/03/270F SN BK BX

Weidmüller Interface GmbH & Co. KG
Klingenbergstraße 26
D-32758 Detmold
Germany

www.weidmueller.com

Technical data

Test for damage to and accidental loosening of conductors

Standard	DIN EN 60999-1 section 9.4 / 12.00	
Requirement	0.2 kg	
Conductor type	Type of conductor and conductor cross-section	AWG 26/1
	Type of conductor and conductor cross-section	AWG 26/19
Evaluation	passed	
Requirement	0.3 kg	
Conductor type	Type of conductor and conductor cross-section	H05V-U0.5
	Type of conductor and conductor cross-section	H05V-K0.5
Evaluation	passed	
Requirement	0.7 kg	
Conductor type	Type of conductor and conductor cross-section	H07V-U2.5
	Type of conductor and conductor cross-section	H07V-K2.5
Evaluation	passed	
Requirement	0.9 kg	
Conductor type	Type of conductor and conductor cross-section	AWG 12/1
	Type of conductor and conductor cross-section	AWG 12/19
Evaluation	passed	

BLF 5.08HC/03/270F SN BK BX

Weidmüller Interface GmbH & Co. KG
Klingenbergstraße 26
D-32758 Detmold
Germany

www.weidmueller.com

Technical data

Pull-out test	Standard	DIN EN 60999-1 section 9.5 / 12.00	
	Requirement	≥10 N	
	Conductor type	Type of conductor and conductor cross-section	AWG 26/1
		Type of conductor and conductor cross-section	AWG 26/19
	Evaluation	passed	
	Requirement	≥20 N	
	Conductor type	Type of conductor and conductor cross-section	H05V-U0.5
		Type of conductor and conductor cross-section	H05V-K0.5
	Evaluation	passed	
	Requirement	≥50 N	
	Conductor type	Type of conductor and conductor cross-section	H07V-U2.5
		Type of conductor and conductor cross-section	H07V-K2.5
	Evaluation	passed	
	Requirement	≥60 N	
	Conductor type	Type of conductor and conductor cross-section	AWG 12/1
		Type of conductor and conductor cross-section	AWG 12/19
	Evaluation	passed	

Classifications

ETIM 6.0	EC002638	ETIM 7.0	EC002638
ETIM 8.0	EC002638	ETIM 9.0	EC002638
ECLASS 9.0	27-44-03-09	ECLASS 9.1	27-44-03-09
ECLASS 10.0	27-44-03-09	ECLASS 11.0	27-46-02-02
ECLASS 12.0	27-46-02-02	ECLASS 13.0	27460202

BLF 5.08HC/03/270F SN BK BX

Weidmüller Interface GmbH & Co. KG
Klingenbergstraße 26
D-32758 Detmold
Germany

www.weidmueller.com

Technical data

Important note

IPC conformity	Conformity: The products are developed, manufactured and delivered according international recognized standards and norms and comply with the assured properties in the data sheet resp. fulfill decorative properties in accordance with IPC-A-610 "Class 2". Further claims on the products can be evaluated on request.
Notes	• Additional variants on request • Gold-plated contact surfaces on request • Rated current related to rated cross-section & min. No. of poles. • Wire end ferrule without plastic collar to DIN 46228/1 • Wire end ferrule with plastic collar to DIN 46228/4 • P on drawing = pitch • Crimping shape "A" for wire end ferrules with PZ 6/5 crimping tool recommended. • The test point can only be used as potential-pickup point. • In accordance with IEC 61984, OMNIMATE-connectors are connectors without breaking capacity (COC). During designated use, connectors are not allowed to be engaged or disengaged when live or under load • Long term storage of the product with average temperature of 50 °C and maximum humidity 70%, 36 months

Approvals

Approvals	
ROHS	Conform
UL File Number Search	UL Website
Certificate No. (cURus)	E60693

Downloads

Approval/Certificate/Document of Conformity	Declaration of the Manufacturer
Engineering Data	CAD data – STEP
Catalogues	Catalogues in PDF-format
Brochures	FL DRIVES EN MB DEVICE MANUF. EN FL DRIVES DE FL BUILDING SAFETY EN FL APPL LED LIGHTING EN FL INDUSTR.CONTROLS EN FL MACHINE SAFETY EN FL HEATING ELECTR EN FL APPL_INVERTER EN FL_BASE_STATION_EN FL ELEVATOR EN FL POWER SUPPLY EN FL 72H SAMPLE SER EN PO OMNIMATE EN PO OMNIMATE EN

BLF 5.08HC/03/270F SN BK BX

Weidmüller Interface GmbH & Co. KG
Klingenbergstraße 26
D-32758 Detmold
Germany

www.weidmueller.com

Drawings

Product image

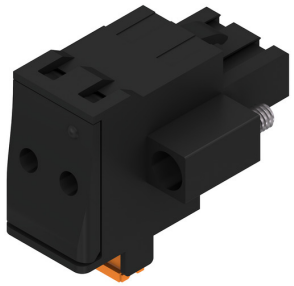

Dimensional drawing

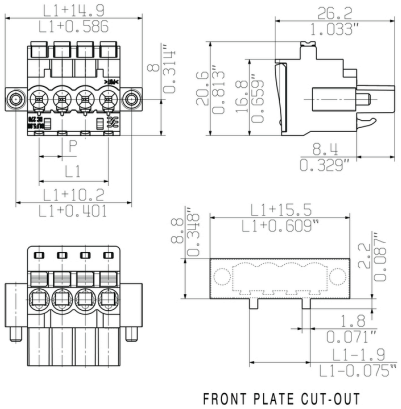

Graph

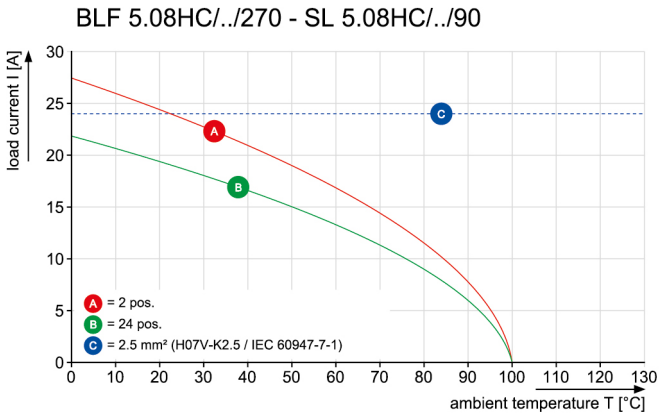



Uncompromising functionality
High vibration resistance

BLF 5.08HC/03/270F SN BK BX

Weidmüller Interface GmbH & Co. KG
Klingenbergstraße 26
D-32758 Detmold
Germany

www.weidmueller.com

Accessories

Coding elements



Only connects what is supposed to be connected: the right connection at the right place.
Coding elements and locking devices clearly assign connecting elements during the manufacturing process and operation
The coding elements and locking devices are inserted prior to assembly or during the cable assembly phase.
The Weidmüller alternative: configure online using the variant configurator to precode prior to delivery.
Incorrect assembly on the circuit board and incorrect plugging of connecting elements is no longer possible.
The advantage: no troubleshooting during manufacture and no operational errors by the user.

General ordering data

Type	BLZ/SL KO BK BX	Version	Product data	Packaging
Order No.	1545710000	PCB plug-in connector, Accessories, Coding element, black, Number		Box
GTIN (EAN)	4008190087142	of poles: 1		
Qty.	50 pc(s).			

Type	BLZ/SL KO OR BX	Version	Product data	Packaging
Order No.	1573010000	PCB plug-in connector, Accessories, Coding element, orange, Number		Box
GTIN (EAN)	4008190048396	of poles: 1		
Qty.	100 pc(s).			

Slotted screwdriver

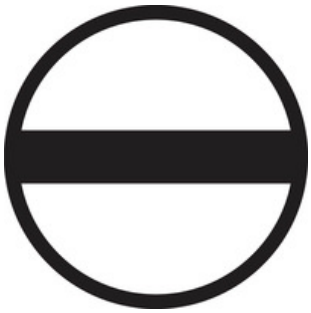

Slotted screwdriver with rounded blade SD DIN 5265, ISO 2380/2, output to DIN 5264, ISO 2380/1. ChromTop tip, SoftFinish grip

General ordering data

Type	SDS 0.6X3.5X100	Version
Order No.	9008330000	Screwdriver, Screwdriver
GTIN (EAN)	4032248056286	
Qty.	1 pc(s).	

Type	SDS 0.6X3.5X200	Version
Order No.	9010110000	Screwdriver, Screwdriver
GTIN (EAN)	4032248300754	
Qty.	1 pc(s).	

BLF 5.08HC/03/270F SN BK BX

Weidmüller Interface GmbH & Co. KG
Klingenbergstraße 26
D-32758 Detmold
Germany

www.weidmueller.com

Accessories

Slotted screwdriver

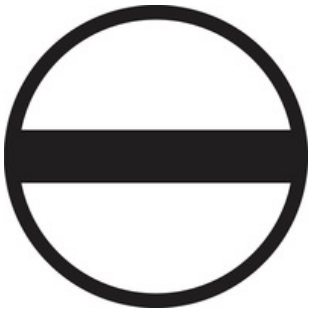

VDE insulated slot-head screwdriver, SDI DIN 7437, ISO 2380/2, drive output acc. to DIN 5264, ISO 2380/1. SoftFinish grip

General ordering data

Type	SDIS 0.6X3.5X100	Version
Order No.	9008390000	Screwdriver, Screwdriver
GTIN (EAN)	4032248056354	
Qty.	1 pc(s).	

BLF 5.08HC/03/270F SN BK BX

Weidmüller Interface GmbH & Co. KG
Klingenbergstraße 26
D-32758 Detmold
Germany

www.weidmueller.com

Drawings

Product benefits



Solid PUSH IN contact
Safe and durable

Product benefits

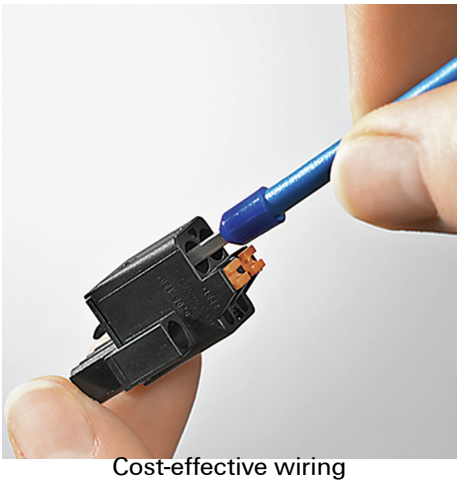

Cost-effective wiring
Quick and intuitive operation

Product benefits

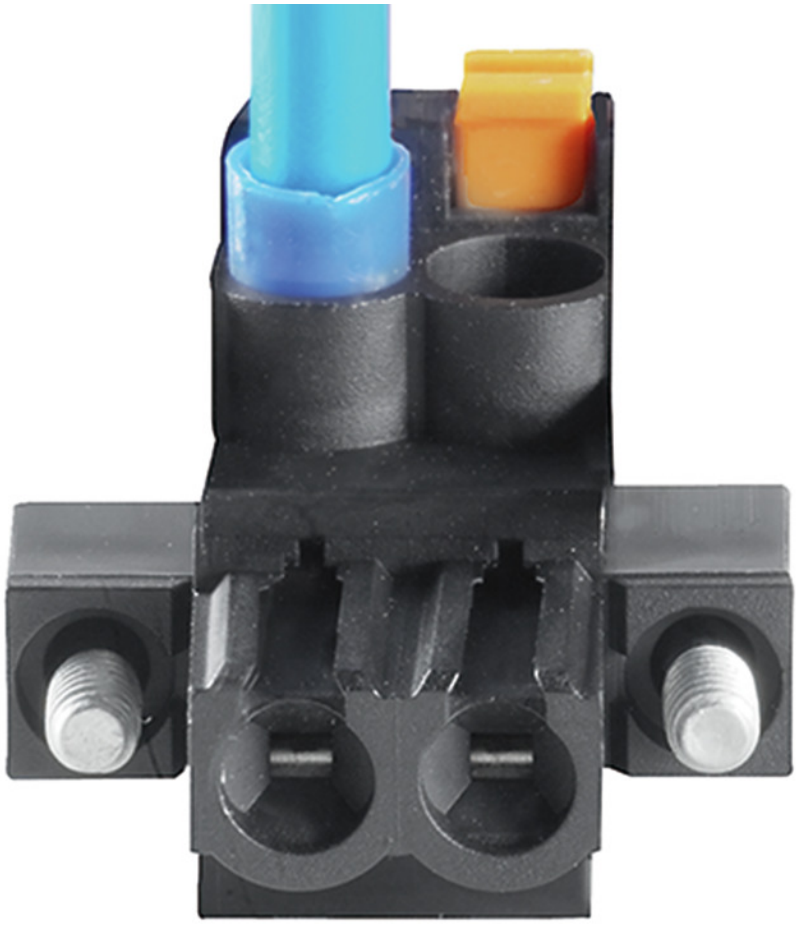

Wide clamping range
Tool-free wire connection

MASSE OHNE TOLERANZ SIND KEINE PRUEFMASSE
DIMS. WITHOUT TOLERANCE ARE NOT CONTROL DIMS.

DIE DEUTSCHE VERSION IST VERBINDLICH
THE GERMAN VERSION IS BINDING

SHOWN: BLF 5.08HC/04/270G SN ...

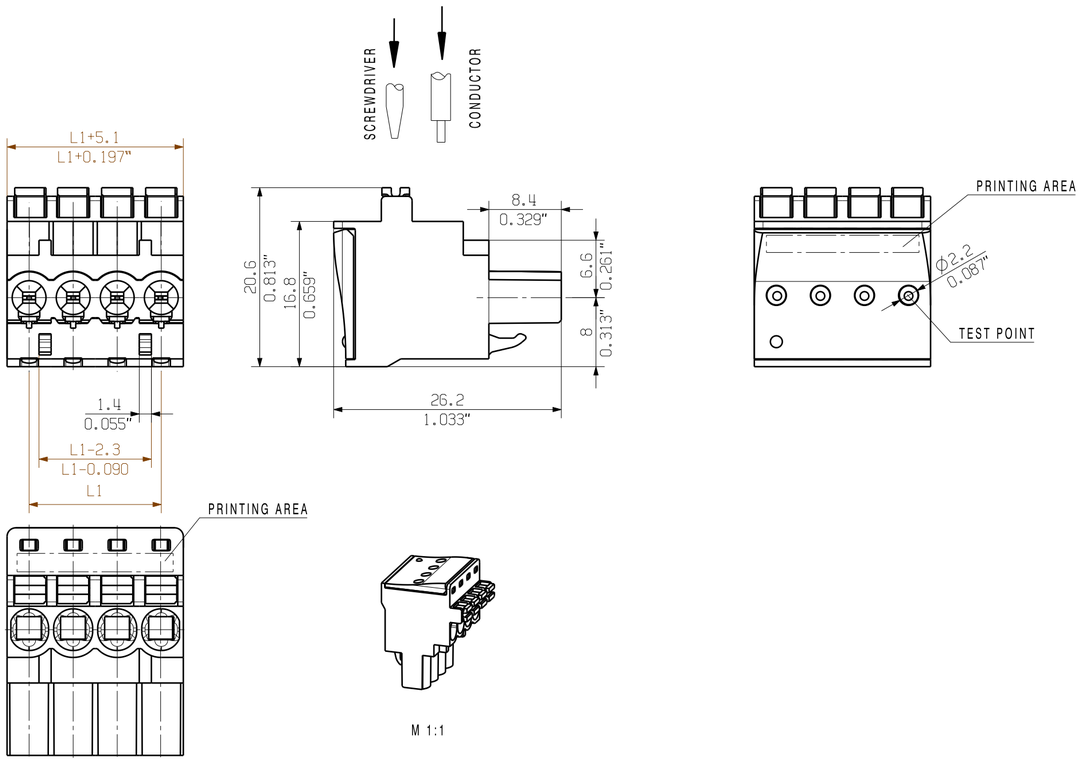

SHOWN: BLF 5.08HC/04/270F SN ...

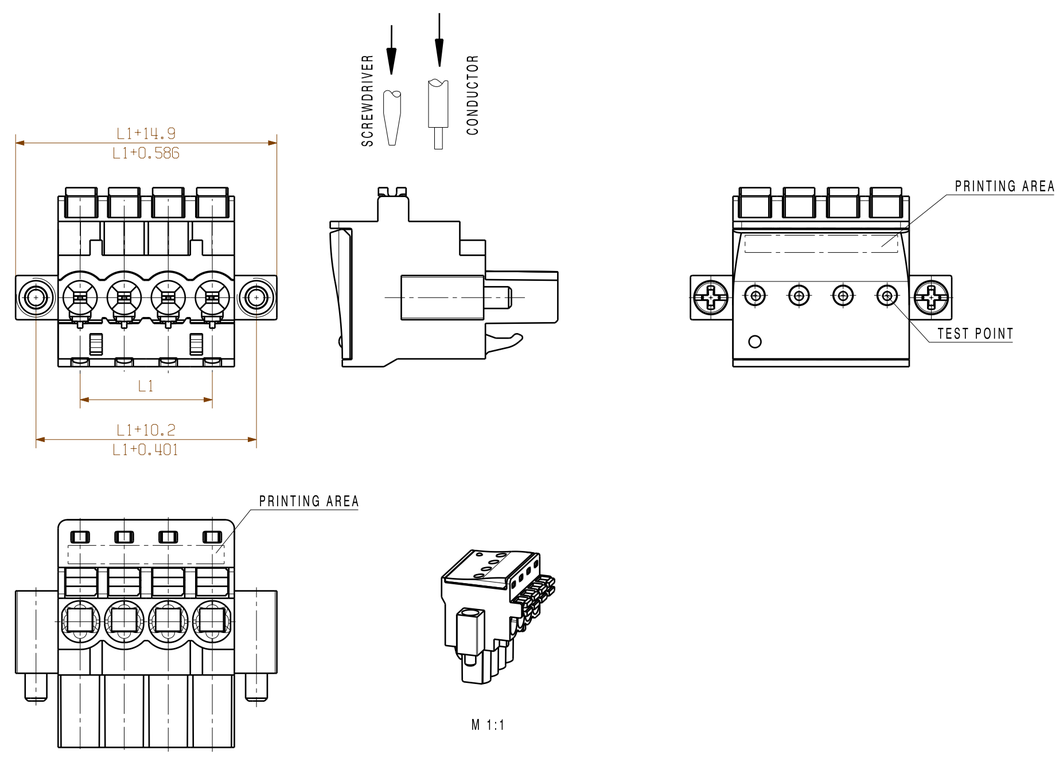

SHOWN: BLF 5.08HC/04/270LR SN ...

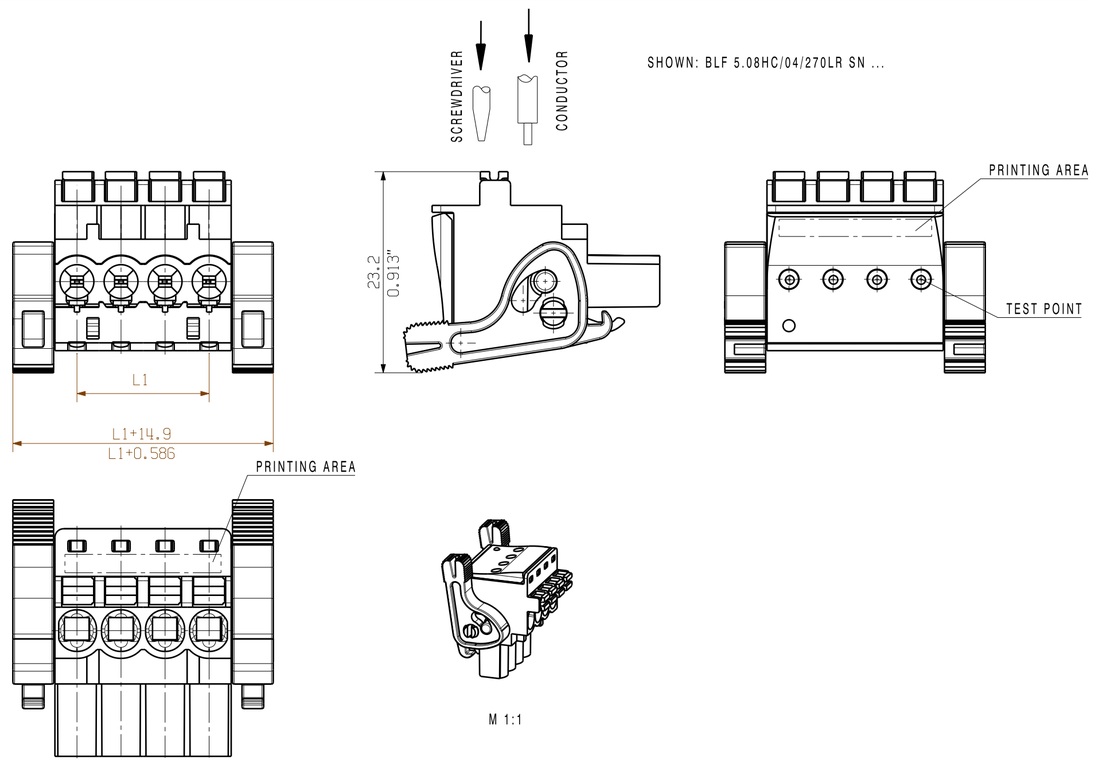

SHOWN: BLF 5.08HC/04/270LH SN ...

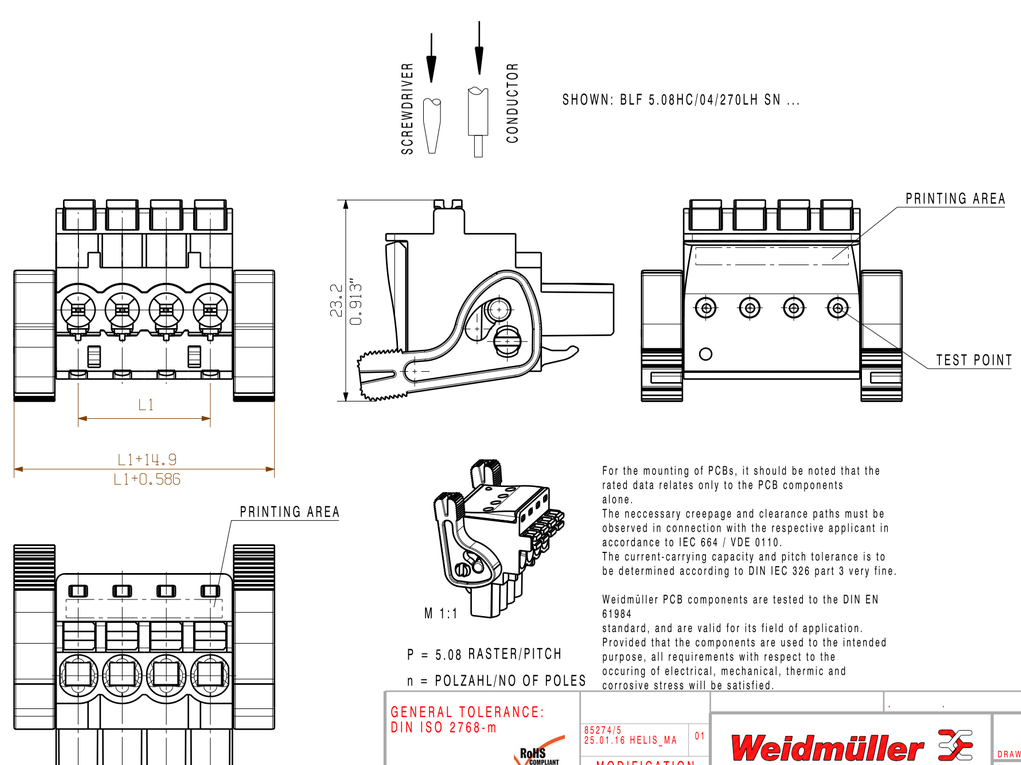

P = 5.08 RASTER/PITCH
n = POLZAHL/NO OF POLES

For the mounting of PCBs, it should be noted that the rated data relates only to the PCB components alone.
The neccessary creepage and clearance paths must be observed in connection with the respective applicant in accordance to IEC 664 / VDE 0110.
The current-carrying capacity and pitch tolerance is to be determined according to DIN IEC 326 part 3 very fine.

Weidmüller PCB components are tested to the DIN EN 61984
standard, and are valid for its field of application.
Provided that the components are used to the intended purpose, all requirements with respect to the occuring of electrical, mechanical, thermic and corrosive stress will be satisfied.

n	L1 [mm]	L1 [Inch]
20	96.52	3.803
19	91.44	3.603
18	86.36	3.403
17	81.28	3.202
16	76.2	3.002
15	71.12	2.802
14	66.04	2.602
13	60.96	2.402
12	55.88	2.202
11	50.8	2.002
10	45.72	1.801
9	40.64	1.601
8	35.56	1.401
7	30.48	1.201
6	25.4	1.001
5	20.32	0.801
4	15.24	0.600
3	10.16	0.400
2	5.08	0.200

GENERAL TOLERANCE:
DIN ISO 2768-m

RoHS COMPLIANT

85274/5
25.01.16 HELIS_MA 01
MODIFICATION

CAT.NO.:.

Weidmüller

C 44258 05
DRAWING NO. ISSUE NO.
SHEET 01 OF 01 SHEETS

	DATE	NAME
DRAWN	27.11.2008	POCTA_C
RESPONSIBLE		HERTEL_S
CHECKED	27.01.2016	HELIS_MA
APPROVED		LANG_T

SCALE: 2/1
SUPERSEDES: .

BLF 5.08HC/../270...SN...
BUCHSENLEISTE
SOCKET BLOCK
PRODUCT FILE: BLF 5.08 7379

WEITERGABE SOWIE VERVIELFAELTIGUNG DIESES DOKUMENTS, VERWERTUNG UND MITTEILUNG SEINES INHALTS SIND VERBOTEN, SOWEIT NICHT AUSDRUECKLICH GESTATTET.
ZUWIDERHANDLUNGEN VERPFLICHTEN ZU SCHADENERSATZ. ALLE RECHTE FUER DEN FALL DER PATENT-, GEBRAUCHSMUSTER- ODER GESCHMACKSMUSTEREINTRAGUNG VORBEHALTEN.
THE REPRODUCTION, DISTRIBUTION AND UTILIZATION OF THIS DOCUMENT AS WELL AS THE COMMUNICATION OF ITS CONTENTS TO OTHERS WITHOUT EXPLICID AUTHORIZATION IS PROHIBITED.
OFFENDERS WILL BE HELD LIABLE FOR THE PAYMENT OF DAMAGES. WEIDMUELLER EXCLUSIVELY RESERVES THE RIGHT TO FILE FOR PATENTS, UTILITY MODELS OR DESIGNS.
© WEIDMUELLER INTERFACE GmbH & Co.KG