BLZP 5.08HC/02/270 SN OR BX

Weidmüller Interface GmbH & Co. KG
Klingenbergstraße 26
D-32758 Detmold
Germany

www.weidmueller.com

Product image

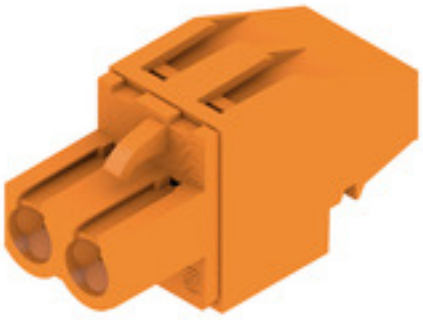

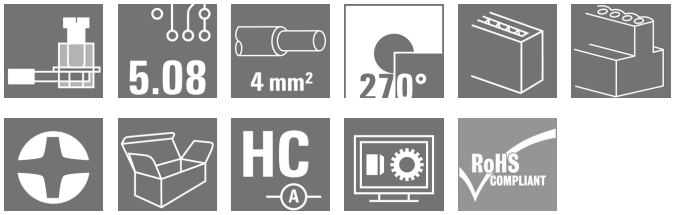

Female plugs with clamping-yoke connection for connecting wires with a right-angle (90° or 270°) outlet direction. The female connectors provide space for labelling and can be coded. Fastened by means of a flange or release latch. They also provide an integrated plus/minus screw, protection against faulty insertion of the wire, and they are delivered with open clamping yokes. HC = High Current.

General ordering data

Version	PCB plug-in connector, female plug, 5.08 mm, Number of poles: 2, 270°, Clamping yoke connection, Clamping range, max. : 4 mm², Box
Order No.	1948790000
Type	BLZP 5.08HC/02/270 SN OR BX
GTIN (EAN)	4032248626243
Qty.	180 pc(s).
Product data	IEC: 400 V / 23 A / 0.2 - 4 mm² UL: 300 V / 20 A / AWG 26 - AWG 12
Packaging	Box

Creation date March 12, 2024 3:15:24 PM CET

BLZP 5.08HC/02/270 SN OR BX

Weidmüller Interface GmbH & Co. KG
Klingenbergstraße 26
D-32758 Detmold
Germany

www.weidmueller.com

Technical data

Dimensions and weights

Depth	27.2 mm	Depth (inches)	1.071 inch
Height	14.1 mm	Height (inches)	0.555 inch
Width	10.16 mm	Width (inches)	0.4 inch
Net weight	3.88 g		

System Parameters

Product family	OMNIMATE Signal - series BL/SL 5.08
Type of connection	Field connection
Wire connection method	Clamping yoke connection
Pitch in mm (P)	5.08 mm
Pitch in inches (P)	0.2 "
Conductor outlet direction	270°
Number of poles	2
L1 in mm	5.08 mm
L1 in inches	0.2 "
Number of rows	1
Pin series quantity	1
Rated cross-section	4 mm²
Touch-safe protection acc. to DIN VDE 57 106	Safe from finger touch
Touch-safe protection acc. to DIN VDE 0470	IP20 plugged/ IP10 unplugged
Protection degree	IP20
Volume resistance	≤5 mΩ
Can be coded	Yes
Stripping length	7 mm
Clamping screw	M 2.5
Screwdriver blade	0.6 x 3.5, PH 1, PZ 1
Screwdriver blade standard	DIN 5264, ISO 8764/2-PH, ISO 8764/2-PZ
Plugging cycles	25
Plugging force/pole, max.	10 N
Pulling force/pole, max.	9 N
Tightening torque	Torque type: Wire connection Usage information: Tightening torque: min. 0.4 Nm, max. 0.5 Nm

Material data

Insulating material	PBT	Colour	orange
Colour chart (similar)	RAL 2000	Insulating material group	IIIa
Comparative Tracking Index (CTI)	≥ 200	UL 94 flammability rating	V-0
Contact material	Cu-alloy	Contact surface	tinned
Layer structure of plug contact	4...8 µm Sn hot-dip tinned	Storage temperature, min.	-40 °C
Storage temperature, max.	70 °C	Operating temperature, min.	-50 °C
Operating temperature, max.	100 °C	Temperature range, installation, min.	-25 °C
Temperature range, installation, max.	100 °C		

Conductors suitable for connection

Clamping range, min.	0.13 mm²
Clamping range, max.	4 mm²
Wire connection cross section AWG, min.	AWG 30

BLZP 5.08HC/02/270 SN OR BX

Weidmüller Interface GmbH & Co. KG
Klingenbergstraße 26
D-32758 Detmold
Germany

www.weidmueller.com

Technical data

Wire connection cross section AWG, max.	AWG 12			
Solid, min. H05(07) V-U	0.2 mm²			
Solid, max. H05(07) V-U	4 mm²			
Flexible, min. H05(07) V-K	0.2 mm²			
Flexible, max. H05(07) V-K	4 mm²			
w. plastic collar ferrule, DIN 46228 pt 4, min.	0.2 mm²			
w. plastic collar ferrule, DIN 46228 pt 4, max.	2.5 mm²			
w. wire end ferrule, DIN 46228 pt 1, min.	0.2 mm²			
w. wire end ferrule, DIN 46228 pt 1, max.	4 mm²			
Plug gauge in accordance with EN 60999 a x b; ø	2.8 mm x 2.4 mm			
Clampable conductor	Cross-section for conductor connection	nominal	0.5 mm²	
	wire end ferrule	Stripping length	nominal	6 mm
		Recommended wire-end ferrule	H0,5/6	
		Stripping length	nominal	8 mm
		Recommended wire-end ferrule	H0,5/12 OR	
	Cross-section for conductor connection	nominal	1 mm²	
	wire end ferrule	Stripping length	nominal	6 mm
		Recommended wire-end ferrule	H1,0/6	
	Cross-section for conductor connection	nominal	1.5 mm²	
	wire end ferrule	Stripping length	nominal	7 mm
		Recommended wire-end ferrule	H1,5/7	
	Cross-section for conductor connection	nominal	2.5 mm²	
	wire end ferrule	Stripping length	nominal	7 mm
		Recommended wire-end ferrule	H2,5/7	
		Stripping length	nominal	10 mm
		Recommended wire-end ferrule	H2,5/15D BL	
Reference text	The outside diameter of the plastic collar should not be larger than the pitch (P), Length of ferrules is to be chosen depending on the product and the rated voltage.			

Rated data acc. to IEC

tested acc. to standard	IEC 60664-1, IEC 61984	Rated current, min. number of poles (Tu=20°C)	23 A
Rated current, max. number of poles (Tu=20°C)	18 A	Rated current, min. number of poles (Tu=40°C)	21 A
Rated current, max. number of poles (Tu=40°C)	16 A	Rated voltage for surge voltage class / pollution degree II/2	400 V
Rated voltage for surge voltage class / pollution degree III/2	320 V	Rated voltage for surge voltage class / pollution degree III/3	250 V
Rated impulse voltage for surge voltage class/ pollution degree II/2	4 kV	Rated impulse voltage for surge voltage class/ pollution degree III/2	4 kV
Rated impulse voltage for surge voltage class/ contamination degree III/3	4 kV	Short-time withstand current resistance	3 x 1s with 120 A

BLZP 5.08HC/02/270 SN OR BX

Weidmüller Interface GmbH & Co. KG
Klingenbergstraße 26
D-32758 Detmold
Germany

www.weidmueller.com

Technical data

Rated data acc. to CSA

Institute (CSA)		Certificate No. (CSA)	200039-1121690
Rated voltage (Use group B / CSA)	300 V	Rated voltage (Use group C / CSA)	50 V
Rated voltage (Use group D / CSA)	300 V	Rated current (Use group B / CSA)	20 A
Rated current (Use group D / CSA)	20 A	Wire cross-section, AWG, min.	AWG 30
Wire cross-section, AWG, max.	AWG 12	Reference to approval values	Specifications are maximum values, details - see approval certificate.

Rated data acc. to UL 1059

Institute (cURus)		Certificate No. (cURus)	E60693
Rated voltage (Use group B / UL 1059)	300 V	Rated voltage (Use group D / UL 1059)	300 V
Rated current (Use group B / UL 1059)	20 A	Rated current (Use group D / UL 1059)	10 A
Wire cross-section, AWG, min.	AWG 26	Wire cross-section, AWG, max.	AWG 12
Reference to approval values	Specifications are maximum values, details - see approval certificate.		

Packing

Packaging	Box	VPE length	348 mm
VPE width	135 mm	VPE height	32 mm

Type tests

Test: Durability of markings	Standard	DIN EN 61984 section 7.3.2 / 09.02 taking pattern from DIN EN 60068-2-70 / 07.96
	Test	mark of origin, rated voltage, rated cross-section, type of material
	Evaluation	available
	Test	durability
	Evaluation	passed
Test: Misengagement (Non-interchangeability)	Standard	DIN EN 60512-13-5 / 11.06, IEC 60512-13-5 / 02.06
	Test	180° turned with coding elements
	Evaluation	passed
	Test	visual examination
	Evaluation	passed

BLZP 5.08HC/02/270 SN OR BX

Weidmüller Interface GmbH & Co. KG
Klingenbergstraße 26
D-32758 Detmold
Germany

www.weidmueller.com

Technical data

Test: Clampable cross section	Standard	DIN EN 60999-1 section 7 and 9.1 / 12.00, DIN EN 60947-1 section 8.2.4.5.1 / 12.02	
	Conductor type	Type of conductor and conductor cross-section	solid 0.2 mm²
		Type of conductor and conductor cross-section	stranded 0.2 mm²
		Type of conductor and conductor cross-section	solid 2.5 mm²
		Type of conductor and conductor cross-section	stranded 2.5 mm²
		Type of conductor and conductor cross-section	AWG 26/1
		Type of conductor and conductor cross-section	AWG 26/19
	Evaluation	passed	
Test for damage to and accidental loosening of conductors	Standard	DIN EN 60999-1 section 9.4 / 12.00	
	Requirement	0.2 kg	
	Conductor type	Type of conductor and conductor cross-section	AWG 26/1
		Type of conductor and conductor cross-section	AWG 26/19
	Evaluation	passed	
	Requirement	0.3 kg	
	Conductor type	Type of conductor and conductor cross-section	solid 0.5 mm²
		Type of conductor and conductor cross-section	stranded 0.5 mm²
	Evaluation	passed	
	Requirement	0.9 kg	
	Conductor type	Type of conductor and conductor cross-section	AWG 12/1
		Type of conductor and conductor cross-section	AWG 12/19
	Evaluation	passed	

BLZP 5.08HC/02/270 SN OR BX

Weidmüller Interface GmbH & Co. KG
Klingenbergstraße 26
D-32758 Detmold
Germany

www.weidmueller.com

Technical data

Pull-out test	Standard	DIN EN 60999-1 section 9.5 / 12.00	
	Requirement	≥10 N	
	Conductor type	Type of conductor and conductor cross-section	AWG 26/1
		Type of conductor and conductor cross-section	AWG 26/19
	Evaluation	passed	
	Requirement	≥20 N	
	Conductor type	Type of conductor and conductor cross-section	H05V-U0.5
		Type of conductor and conductor cross-section	H05V-K0.5
	Evaluation	passed	
	Requirement	≥60 N	
	Conductor type	Type of conductor and conductor cross-section	H07V-U4.0
		Type of conductor and conductor cross-section	H07V-K4.0
		Type of conductor and conductor cross-section	AWG 12/1
		Type of conductor and conductor cross-section	AWG 12/19
	Evaluation	passed	

Classifications

ETIM 6.0	EC002638	ETIM 7.0	EC002638
ETIM 8.0	EC002638	ETIM 9.0	EC002638
ECLASS 9.0	27-44-03-09	ECLASS 9.1	27-44-03-09
ECLASS 10.0	27-44-03-09	ECLASS 11.0	27-46-02-02
ECLASS 12.0	27-46-02-02	ECLASS 13.0	27-46-02-02

BLZP 5.08HC/02/270 SN OR BX

Weidmüller Interface GmbH & Co. KG
Klingenbergstraße 26
D-32758 Detmold
Germany

www.weidmueller.com

Technical data

Important note

IPC conformity	Conformity: The products are developed, manufactured and delivered according international recognized standards and norms and comply with the assured properties in the data sheet resp. fulfill decorative properties in accordance with IPC-A-610 "Class 2". Further claims on the products can be evaluated on request.
Notes	• Additional variants on request • Gold-plated contact surfaces on request • Rated current related to rated cross-section & min. No. of poles. • Wire end ferrule without plastic collar to DIN 46228/1 • Wire end ferrule with plastic collar to DIN 46228/4 • P on drawing = pitch • Rated data refer only to the component itself. Clearance and creepage distances to other components are to be designed in accordance with the relevant application standards. • In accordance with IEC 61984, OMNIMATE-connectors are connectors without breaking capacity (COC). During designated use, connectors are not allowed to be engaged or disengaged when live or under load • Long term storage of the product with average temperature of 50 °C and maximum humidity 70%, 36 months

Approvals

Approvals	
ROHS	Conform
UL File Number Search	UL Website
Certificate No. (cURus)	E60693

Downloads

Approval/Certificate/Document of Conformity	Declaration of the Manufacturer
Engineering Data	CAD data – STEP
Catalogues	Catalogues in PDF-format
Brochures	FL DRIVES EN MB DEVICE MANUF. EN FL DRIVES DE FL BUILDING SAFETY EN FL APPL LED LIGHTING EN FL INDUSTR.CONTROLS EN FL MACHINE SAFETY EN FL HEATING ELECTR EN FL APPL_INVERTER EN FL_BASE_STATION_EN FL ELEVATOR EN FL POWER SUPPLY EN FL 72H SAMPLE SER EN PO OMNIMATE EN PO OMNIMATE EN

BLZP 5.08HC/02/270 SN OR BX

Weidmüller Interface GmbH & Co. KG
Klingenbergstraße 26
D-32758 Detmold
Germany

www.weidmueller.com

Drawings

Product image

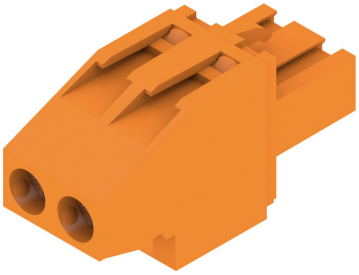

Dimensional drawing

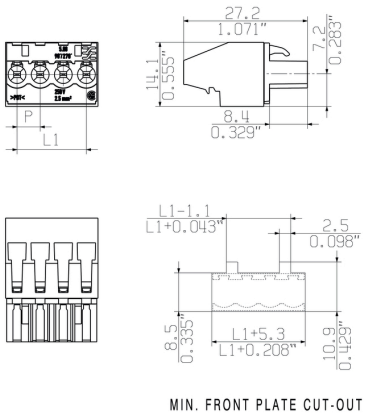

BLZP 5.08HC/02/270 SN OR BX

Weidmüller Interface GmbH & Co. KG
Klingenbergstraße 26
D-32758 Detmold
Germany

www.weidmueller.com

Accessories

Coding elements



Only connects what is supposed to be connected: the right connection at the right place.
Coding elements and locking devices clearly assign connecting elements during the manufacturing process and operation
The coding elements and locking devices are inserted prior to assembly or during the cable assembly phase.
The Weidmüller alternative: configure online using the variant configurator to precode prior to delivery.
Incorrect assembly on the circuit board and incorrect plugging of connecting elements is no longer possible.
The advantage: no troubleshooting during manufacture and no operational errors by the user.

General ordering data

Type	BLZ/SL KO OR BX	Version	Product data	Packaging
Order No.	1573010000	PCB plug-in connector, Accessories, Coding element, orange, Number		Box
GTIN (EAN)	4008190048396	of poles: 1		
Qty.	100 pc(s).			

Type	BLZ/SL KO BK BX	Version	Product data	Packaging
Order No.	1545710000	PCB plug-in connector, Accessories, Coding element, black, Number		Box
GTIN (EAN)	4008190087142	of poles: 1		
Qty.	50 pc(s).			

Slotted screwdriver

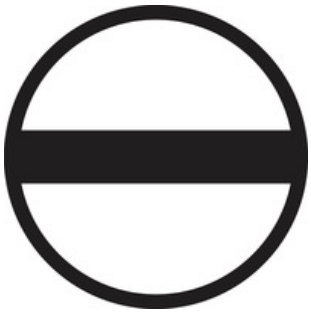

VDE insulated slot-head screwdriver, SDI DIN 7437, ISO 2380/2, drive output acc. to DIN 5264, ISO 2380/1. SoftFinish grip

General ordering data

Type	SDIS 0.6X3.5X100	Version
Order No.	9008390000	Screwdriver, Screwdriver
GTIN (EAN)	4032248056354	
Qty.	1 pc(s).	

BLZP 5.08HC/02/270 SN OR BX

Weidmüller Interface GmbH & Co. KG
Klingenbergstraße 26
D-32758 Detmold
Germany

www.weidmueller.com

Accessories

Crosshead screwdriver Pozidriv



Crosshead screwdriver, Pozidriv, SDK PZ DIN 5262, ISO 8764/2-PZ, output to ISO 8764/1-PZ, ChromTop tip, SoftFinish grip

General ordering data

Type	SDK PZ1	Version
Order No.	9008530000	Screwdriver, Screwdriver
GTIN (EAN)	4032248056521	
Qty.	1 pc(s).	

Slotted screwdriver

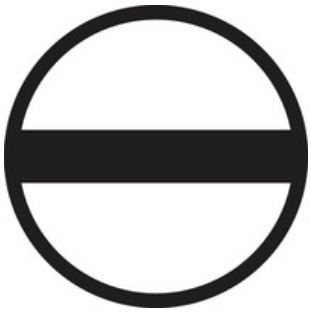

Slotted screwdriver with rounded blade SD DIN 5265, ISO 2380/2, output to DIN 5264, ISO 2380/1. ChromTop tip, SoftFinish grip

General ordering data

Type	SDS 0.6X3.5X100	Version
Order No.	9008330000	Screwdriver, Screwdriver
GTIN (EAN)	4032248056286	
Qty.	1 pc(s).	

BLZP 5.08HC/02/270 SN OR BX

Weidmüller Interface GmbH & Co. KG
Klingenbergstraße 26
D-32758 Detmold
Germany

www.weidmueller.com

Accessories

Crosshead screwdriver Phillips



Crosshead screwdriver, Phillips, SDK PH DIN 5262, ISO 8764/2-PH, output to ISO 8764-PH, ChromTop tip, SoftFinish grip

General ordering data

Type	SDK PH1	Version
Order No.	9008480000	Screwdriver, Screwdriver
GTIN (EAN)	4032248056477	
Qty.	1 pc(s).	

Dimensions without tolerances are no check dimensions

The English version is binding

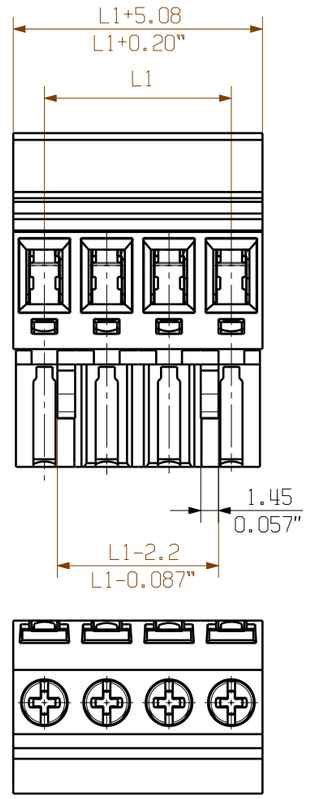

shown:
BLZP 5.08HC/04/90

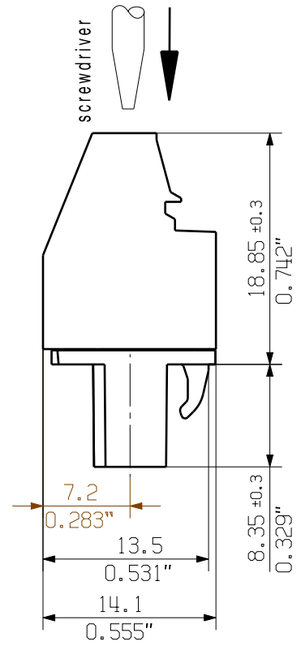

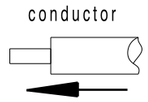

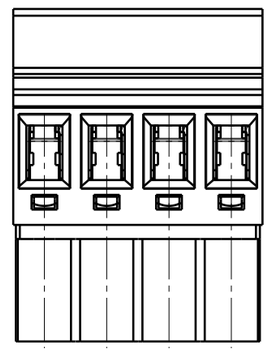

shown:
BLZP 5.08HC/04/270

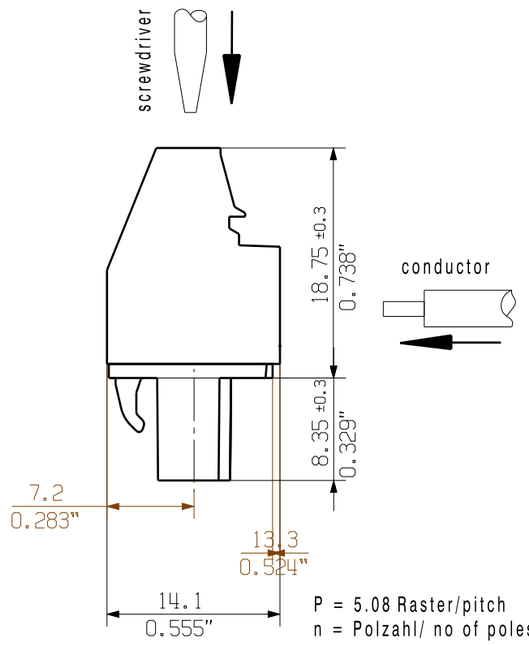

P = 5.08 Raster/pitch
n = Polzahl/ no of poles

n	L1 [mm]	L1 [inch]
24	116,84	4,60
23	111,76	4,40
22	106,68	4,20
21	101,60	4,00
20	96,52	3,80
19	91,44	3,60
18	86,36	3,40
17	81,28	3,20
16	76,20	3,00
15	71,12	2,80
14	66,04	2,60
13	60,96	2,40
12	55,88	2,20
11	50,80	2,00
10	45,72	1,80
9	40,64	1,60
8	35,56	1,40
7	30,48	1,20
6	25,40	1,00
5	20,32	0,80
4	15,24	0,60
3	10,16	0,40
2	5,08	0,20

For the mounting of PCBs, it should be noted that the rated data given in the catalogue relates only to the connection elements. The neccessary creepage and clearance paths must be observed in connection with the respective applicant in accordance to VDE 0110. The current-carrying capacity and pitch tolerance is to be determined according to DIN IEC 326 part 3 very fine.

Weidmueller connectors are tested to the DIN VDE 0627 standard, and are valid for its field of application. Provided that the connectors are used to the intended purpose, all requirements with respect to the occuring of electrical, mechanical, thermic and corrosive stress will be satisfied.

General tolerance:
DIN ISO 2768-mK

RoHS COMPLIANT

89239/5
01.08.16 HELIS_MA 02
.
Modification

. .

Cat.no.: .

Weidmüller

3 39786 (12)
Drawing no. Issue no.

Sheet 01 of 03 sheets

		Date	Name
	Drawn	10.06.2013	HERTEL_S
	Responsible		HERTEL_S
Scale: 2:1	Checked	08.08.2016	HELIS_MA
Supersedes: .	Approved		LANG_T

BLZP 5.08HC/../../... ..

BUCHSENLEISTE
SOCKET BLOCK

Product file: BLZP 5.08HC 7159

The reproduction, distribution and utilization of this document as well as the communication of its contents to others without explicit authorization is prohibited.
Offenders will be held liable for the payment of damages. Weidmueller exclusively reserves the right to file for patents, utility models or designs.
© Weidmueller Interface GmbH & Co. KG