SL-SMT 5.08HC/07/270GH 1.5SN BK RL

Weidmüller Interface GmbH & Co. KG
Klingenbergstraße 26
D-32758 Detmold
Germany

www.weidmueller.com

Product image





High-temperature-resistant, straight, open pin header. Packed in box or tape. On tape and with 1.5 mm solder pin, optimised for automatic assembly. 3.2 mm solder pin suitable for reflow and wave soldering. The pin headers provide space for labelling and can be coded. HC = High Current.

General ordering data

Version	PCB plug-in connector, male header, closed side, THT/THR solder connection, 5.08 mm, Number of poles: 7, 270°, Solder pin length (I): 1.5 mm, tinned, black, Tape
Order No.	1877640000
Type	SL-SMT 5.08HC/07/270GH 1.5SN BK RL
GTIN (EAN)	4032248468232
Qty.	335 pc(s).
Product data	IEC: 400 V / 27.5 A UL: 300 V / 18.5 A
Packaging	Tape

Creation date December 4, 2023 4:13:18 PM CET

SL-SMT 5.08HC/07/270GH 1.5SN BK RL

Weidmüller Interface GmbH & Co. KG
Klingenbergstraße 26
D-32758 Detmold
Germany

www.weidmueller.com

Technical data

Dimensions and weights

Depth	12 mm	Depth (inches)	0.472 inch
Height	12.5 mm	Height (inches)	0.492 inch
Height of lowest version	11 mm	Width	38.76 mm
Width (inches)	1.526 inch	Net weight	4.27 g

System specifications

Product family	OMNIMATE Signal - series BL/SL 5.08	Type of connection	Board connection
Mounting onto the PCB	THT/THR solder connection	Pitch in mm (P)	5.08 mm
Pitch in inches (P)	0.2 inch	Outgoing elbow	270°
Number of poles	7	Number of solder pins per pole	1
Solder pin length (l)	1.5 mm	Solder pin length tolerance	0 / -0.3 mm
Solder pin dimensions	d = 1.2 mm, Octagonal	Solder eyelet hole diameter (D)	1.4 mm
Solder eyelet hole diameter tolerance (D)	+ 0,1 mm	L1 in mm	30.48 mm
L1 in inches	1.2 inch	Number of rows	1
Pin series quantity	1	Touch-safe protection acc. to DIN VDE 57 106	finger-safe unplugged/ back-of-hand-safe plugged
Touch-safe protection acc. to DIN VDE 0470	IP20 plugged/ IP10 unplugged	Protection degree	IP20
Volume resistance	≤5 mΩ	Can be coded	Yes
Plugging force/pole, max.	9 N	Pulling force/pole, max.	7 N

Material data

Insulating material	LCP GF	Colour	black
Colour chart (similar)	RAL 9011	Insulating material group	IIIa
Comparative Tracking Index (CTI)	≥ 175	Moisture Level (MSL)	1
UL 94 flammability rating	V-0	Contact material	CuMg
Contact surface	tinned	Layer structure of solder connection	1...3 µm Ni / 2...4 µm Sn matt
Layer structure of plug contact	1...3 µm Ni / 2...4 µm Sn matt	Storage temperature, min.	-40 °C
Storage temperature, max.	70 °C	Operating temperature, min.	-50 °C
Operating temperature, max.	100 °C	Temperature range, installation, min.	-30 °C
Temperature range, installation, max.	100 °C		

Rated data acc. to IEC

tested acc. to standard	IEC 60664-1, IEC 61984	Rated current, min. number of poles (Tu=20°C)	27.5 A
Rated current, max. number of poles (Tu=20°C)	19 A	Rated current, min. number of poles (Tu=40°C)	24 A
Rated current, max. number of poles (Tu=40°C)	16.5 A	Rated voltage for surge voltage class / pollution degree II/2	400 V
Rated voltage for surge voltage class / pollution degree III/2	320 V	Rated voltage for surge voltage class / pollution degree III/3	250 V
Rated impulse voltage for surge voltage class/ pollution degree II/2	4 kV	Rated impulse voltage for surge voltage class/ pollution degree III/2	4 kV
Rated impulse voltage for surge voltage class/ contamination degree III/3	4 kV		

SL-SMT 5.08HC/07/270GH 1.5SN BK RL

Weidmüller Interface GmbH & Co. KG
Klingenbergstraße 26
D-32758 Detmold
Germany

www.weidmueller.com

Technical data

Rated data acc. to CSA

Institute (CSA)		Certificate No. (CSA)	200039-1176845
Rated voltage (Use group B / CSA)	300 V	Rated voltage (Use group D / CSA)	300 V
Rated current (Use group B / CSA)	18.5 A	Rated current (Use group D / CSA)	18.5 A
Reference to approval values	Specifications are maximum values, details - see approval certificate.		

Rated data acc. to UL 1059

Institute (UR)		Certificate No. (UR)	E60693
Rated voltage (Use group B / UL 1059)	300 V	Rated voltage (Use group D / UL 1059)	300 V
Rated current (Use group B / UL 1059)	18.5 A	Rated current (Use group D / UL 1059)	10 A
Reference to approval values	Specifications are maximum values, details - see approval certificate.		

Packing

ESD Level packaging	static dissipative	Packaging	Tape
VPE length	389 mm	VPE width	363 mm
VPE height	64 mm	Tape depth (T2)	13.7 mm
Tape width (W)	56 mm	Tape pocket depth (K0)	13.2 mm
Tape pocket height (A0)	12.3 mm	Tape pocket width (B0)	39 mm
Tape pocket separation (P1)	16 mm	Tape hole separation (E)	1.75 mm
Tape pocket separation (F)	26.2 mm	Tape reel diameter ⌀ (A)	330 mm
Surface resistance	Rs = 10^9 - 10^{12} Ω		

Classifications

ETIM 6.0	EC002637	ETIM 7.0	EC002637
ETIM 8.0	EC002637	ETIM 9.0	EC002637
ECLASS 9.0	27-44-04-02	ECLASS 9.1	27-44-04-02
ECLASS 10.0	27-44-04-02	ECLASS 11.0	27-46-02-01
ECLASS 12.0	27-46-02-01	ECLASS 13.0	27460201

SL-SMT 5.08HC/07/270GH 1.5SN BK RL

Weidmüller Interface GmbH & Co. KG
Klingenbergstraße 26
D-32758 Detmold
Germany

www.weidmueller.com

Technical data

Important note

IPC conformity	Conformity: The products are developed, manufactured and delivered according international recognized standards and norms and comply with the assured properties in the data sheet resp. fulfill decorative properties in accordance with IPC-A-610 "Class 2". Further claims on the products can be evaluated on request.
Notes	• Gold-plated contact surfaces on request • Rated current related to rated cross-section & min. No. of poles. • Diameter of solder eyelet D = 1.4+0.1mm • Solder eyelet diameter D = 1.5 + 0.1 mm, from 9 poles • P on drawing = pitch • Rated data refer only to the component itself. Clearance and creepage distances to other components are to be designed in accordance with the relevant application standards. • In accordance with IEC 61984, OMNIMATE-connectors are connectors without breaking capacity (COC). During designated use, connectors are not allowed to be engaged or disengaged when live or under load • Long term storage of the product with average temperature of 50 °C and maximum humidity 70%, 36 months

Approvals

Approvals	
ROHS	Conform
UL File Number Search	UL Website
Certificate No. (UR)	E60693

SL-SMT 5.08HC/07/270GH 1.5SN BK RL

Weidmüller Interface GmbH & Co. KG
Klingenbergstraße 26
D-32758 Detmold
Germany

www.weidmueller.com

Technical data

Downloads

Approval/Certificate/Document of Conformity	Declaration of the Manufacturer
Engineering Data	CAD data – STEP
Product Change Notification	PCN_2015_208_PL30X_SC-SMT_SL_SMT_3.xx_5.xx_neue_Tapeverpackung_Step_4_DE PCN_2015_208_PL30X_SC-SMT_SL_SMT_3.xx_5.xx_new_Tape_Packaging_Step_4_EN Changeover to ESD bags for "Tape on Reel" products Umstellung auf ESD-Beutel bei „Tape on Reel" Produkten
Catalogues	Catalogues in PDF-format
Brochures	FL DRIVES EN MB SMT EN FL DRIVES DE MB DEVICE MANUF. EN FL BUILDING SAFETY EN FL APPL LED LIGHTING EN FL INDUSTR.CONTROLS EN FL MACHINE SAFETY EN FL HEATING ELECTR EN FL APPL_INVERTER EN FL_BASE_STATION_EN FL ELEVATOR EN FL POWER SUPPLY EN FL 72H SAMPLE SER EN PO OMNIMATE EN PO OMNIMATE EN
White paper surface mount technology	Download Whitepaper

SL-SMT 5.08HC/07/270GH 1.5SN BK RL

Weidmüller Interface GmbH & Co. KG
Klingenbergstraße 26
D-32758 Detmold
Germany

www.weidmueller.com

Drawings

Product image

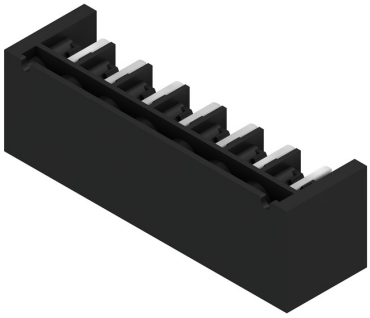

Dimensional drawing

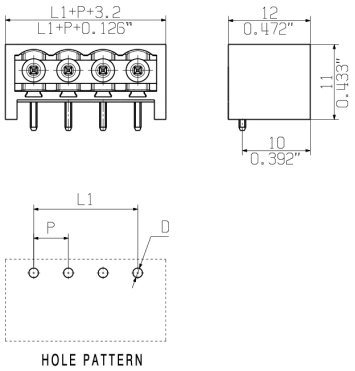

Dimensional drawing

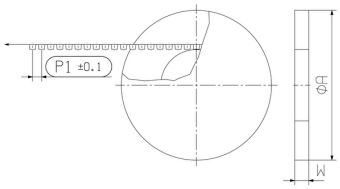

Dimensional drawing

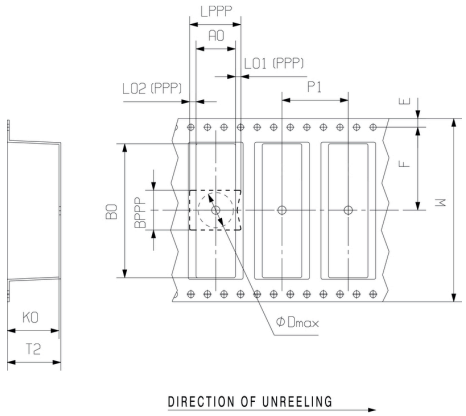

Example of use



Product benefits

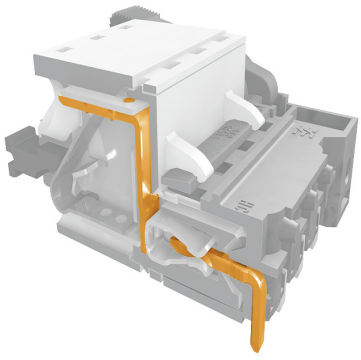

Safe power transmission
Proven properties

SL-SMT 5.08HC/07/270GH 1.5SN BK RL

Weidmüller Interface GmbH & Co. KG
Klingenbergstraße 26
D-32758 Detmold
Germany

www.weidmueller.com

Accessories

Coding elements



Only connects what is supposed to be connected: the right connection at the right place.
Coding elements and locking devices clearly assign connecting elements during the manufacturing process and operation
The coding elements and locking devices are inserted prior to assembly or during the cable assembly phase.
The Weidmüller alternative: configure online using the variant configurator to precode prior to delivery.
Incorrect assembly on the circuit board and incorrect plugging of connecting elements is no longer possible.
The advantage: no troubleshooting during manufacture and no operational errors by the user.

General ordering data

Type	BLZ/SL KO BK BX	Version	Product data	Packaging
Order No.	1545710000	PCB plug-in connector, Accessories, Coding element, black, Number		Box
GTIN (EAN)	4008190087142	of poles: 1		
Qty.	50 pc(s).			

Type	BLZ/SL KO OR BX	Version	Product data	Packaging
Order No.	1573010000	PCB plug-in connector, Accessories, Coding element, orange, Number		Box
GTIN (EAN)	4008190048396	of poles: 1		
Qty.	100 pc(s).			

Additional accessories



No task is too small when creating the perfect solution. br />
Connections form just one part of the overall process. Small details are often the key to the perfect solution in applications where potentials are tested, grouped or even isolated.
A system is not a system without small but useful details:

- Test plugs - ensure reliable pick-up from diagnostic sockets
- Cross-connectors - ensure a stable electrical distribution contact directly at the connection
- Compartment partition elements - divide a large number of male connectors into several separate socket connector channels
- Locks and clips - optional vibration-resistant clip-on connection or mounting for male and female connectors

In tandem with the manufacturing process and application - more accessories = smaller workload

General ordering data

Type	SL AT OR	Version	Product data	Packaging
Order No.	1598300000	PCB plug-in connector, Accessories, Spacer, orange, Number of poles:		Box
GTIN (EAN)	4008190189266	1		
Qty.	100 pc(s).			

SL-SMT 5.08HC/07/270GH 1.5SN BK RL

Weidmüller Interface GmbH & Co. KG
Klingenbergstraße 26
D-32758 Detmold
Germany

www.weidmueller.com

Accessories

Type	SL AT SW	Version	Product data	Packaging
Order No.	1770240000	PCB plug-in connector, Accessories, Spacer, black, Number of poles: 1		Box
GTIN (EAN)	4032248117710			
Qty.	100 pc(s).			

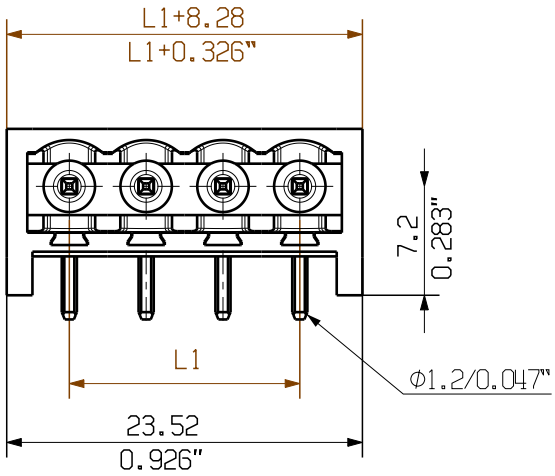

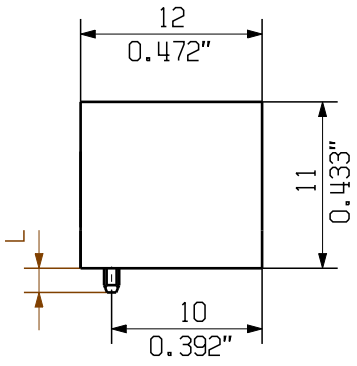

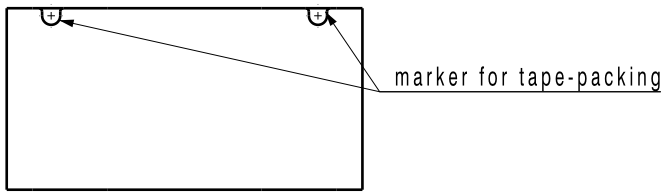

1:1

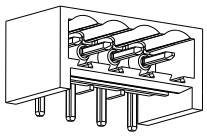

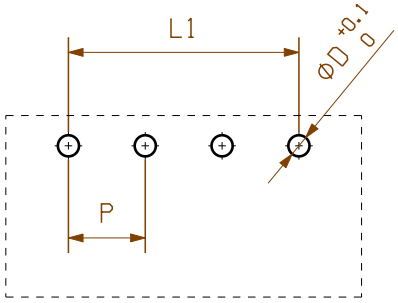

hole pattern

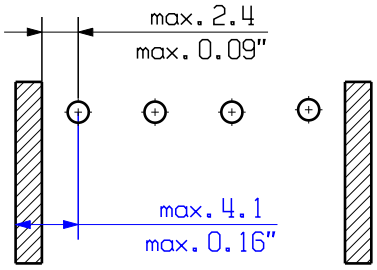

paste free area

For the mounting of PCBs, it should be noted that the rated data given in the catalogue relates only to the connection elements. The neccessary creepage and clearance paths must be observed in connection with the respective applicant in accordance to VDE 0110. The current-carrying capacity and pitch tolerance is to be determined according to DIN IEC 326 part 3 very fine.

Weidmüller connectors are tested to the DIN VDE 0627 standard, and are valid for its field of application. Provided that the connectors are used to the intended purpose, all requirements with respect to the occuring of electrical, mechanical, thermic and corrosive stress will be satisfied.

D=1.4/0.055" (reflow soldering)
recommendation for automatic assembly
(1.4mm for n=2...8)

P= Pitch

shown:SL-SMT 5.08HC/04/270GH

1,5	0 -0.3
3,2	0.1 -0.3
pin lenght L	tolerance

n	L1 [mm]	L1 [Inch]	tolerance L1
8	35,56	1,400	±0.1
7	30,48	1,200	
6	25,40	1,000	
5	20,32	0,800	
4	15,24	0,600	
3	10,16	0,400	
2	5,08	0,200	

GENERAL TOLERANCE:
DIN ISO 2768-m

RoHS COMPLIANT

91033/4
03.02.17 HERTEL_S
.
00

Modification

. .

Cat.no.: .

Weidmüller

3 37899 17

Drawing no. Issue no.

Sheet 02 of 06 sheets

	Date	Name
Drawn	23.03.2004	DOMRATH_M
Responsible		HERTEL_S
Checked	06.02.2017	HELIS_MA
Approved		LANG_T

Scale: 2/1

Supersedes: .

SL-SMT 5.08HC/../270...

STIFTLEISTE
MALE HEADER

Product file: SL-SMT 5.08 7313

The reproduction, distribution and utilization of this document as well as the communication of its contents to others without explicit authorization is prohibited. Offenders will be held liable for the payment of damages. Weidmueller exclusively reserves the right to file for patents, utility models or designs.
© Weidmueller Interface GmbH & Co. KG

Wave Solder Profile

Recommended wave solderding profiles

Weidmüller Interface GmbH & Co. KG
Klingenbergstraße 16
D-32758 Detmold
Germany
Fon: +49 5231 14-0
Fax: +49 5231 14-292083
www.weidmueller.com

Single Wave:

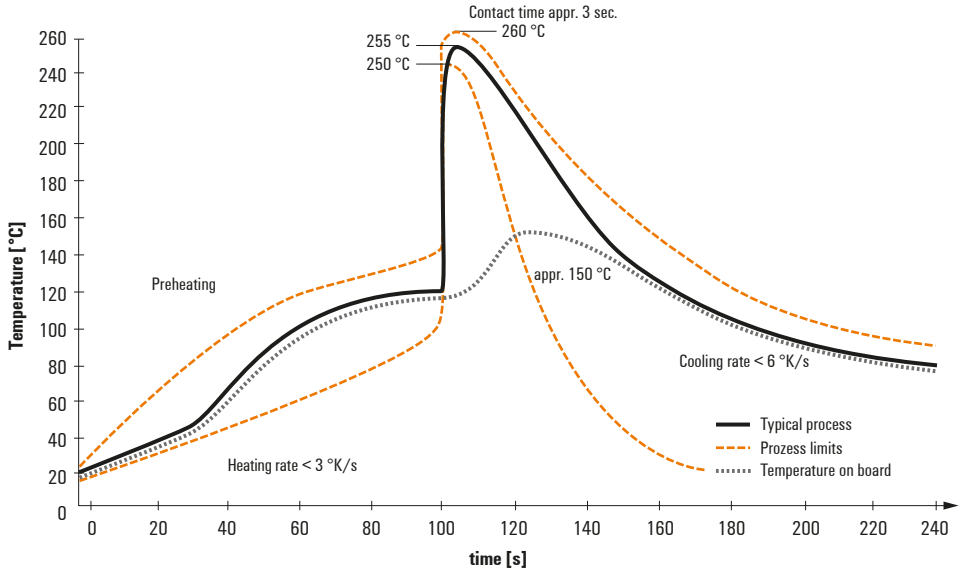

Double Wave:

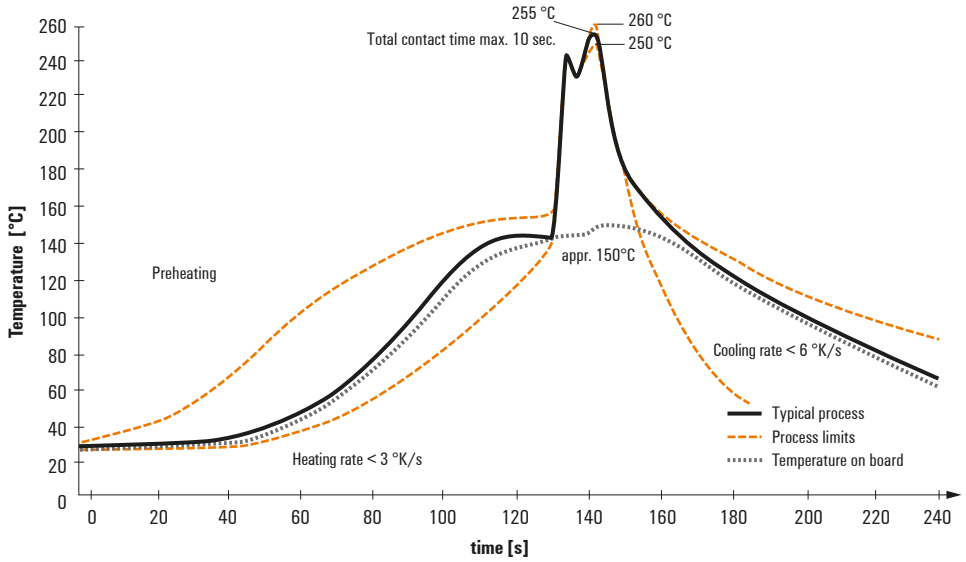

Wave soldering profiles

Wired connection elements should be processed in accordance with the DIN EN 61760-1 standard. We have included two recommendations for practical wave soldering profiles, with which Weidmüller PCB terminals and connectors are qualified.

When choosing a suitable profile for your application, the following factors also need to be considered:
- PCB thickness
- Proportion of Cu in the layers
- Single/double-sided assembly
- Product range
- Heating and cooling rates

The single and double wave profiles each indicate the recommended operating range, including the maximum soldering temperature of 260°C. In practice, the maximum soldering temperature is quite often well below the above maximum profile.

We reserve the right to make technical changes.

Reflow Solder Profile

Recommended reflow soldering profile

Weidmüller Interface GmbH & Co. KG
Klingenbergstraße 16
D-32758 Detmold
Germany
Fon: +49 5231 14-0
Fax: +49 5231 14-292083
www.weidmueller.com

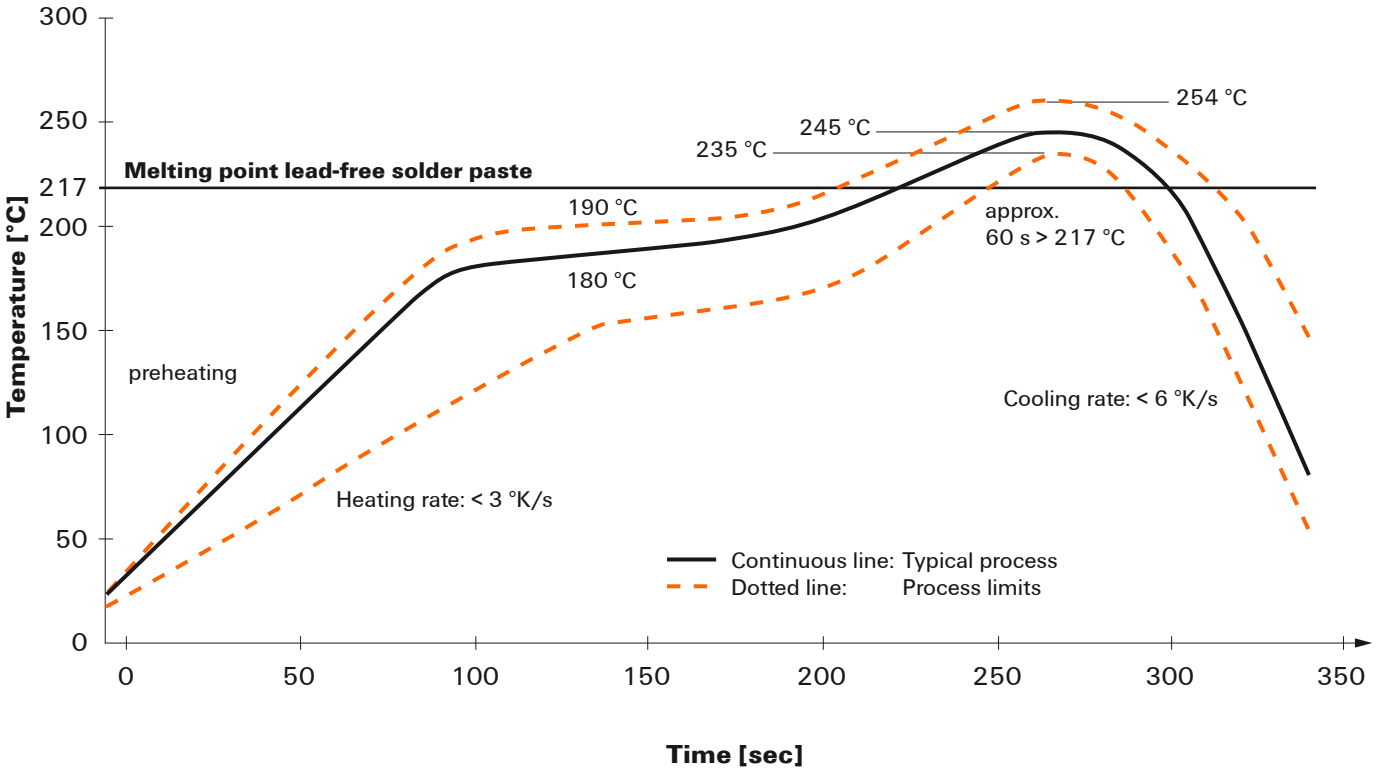

Reflow soldering profile

The perfect soldering profile for SMT Surface Mount Technology is one the most exiting question in SMT production. But there are more than one correct answer: The diagram of temperature-on-time is related to processing features of solder paste and to maximum load of components.

We have to consider the following parameters:
- Time for pre heating
- Maximum temperature
- Time above melting point
- Time for cooling
- Maximum heating rate
- Maximum cooling rate

We recommend a typical solder profile with associated process limits. With preheating components and board are prepared smoothly for the solder phase. Heating rate is typically ≤ +3K/s. In parallel the solder paste is ‚activated'. The time above melting point of 217°C the paste gets liquid and components and boards begin to connect. The maximum temperature of 245°C to 254°C should stay between 10 and 40 seconds. In the cooling phase at ≥ -6K/s solder is cured. Board and components cool down while avoiding cold cracks.

We reserve the right to make technical changes.