# OMNIMATE Signal - series BL/SL 5.00
# SL-SMT 5.00HC/09/90 3.2SN BK BX

**Weidmüller Interface GmbH & Co. KG**
Klingenbergstraße 16
D-32758 Detmold
Germany
Fon: +49 5231 14-0
Fax: +49 5231 14-292083
www.weidmueller.com

## Product image



Similar to illustration

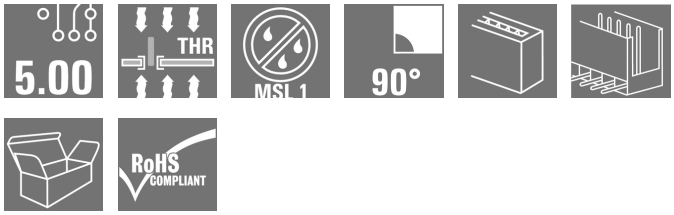


High-temperature-resistant, 90° angled, open male header. Packed in box or tape. On tape, with 1.5 mm solder pin, optimised for automatic assembly. 3.2 mm solder pin suitable for reflow and wave soldering. The pin headers provide space for labelling and can be coded. HC = High Current.

### General ordering data

| | |
|---|---|
| Type | SL-SMT 5.00HC/09/90 3.2SN BK BX |
| Order No. | 1839960000 |
| Version | PCB plug-in connector, male header, open side, THT/THR solder connection, 5.00 mm, No. of poles: 9, 90°, Solder pin length (l): 3.2 mm, tinned, Black, Box |
| GTIN (EAN) | 4032248350605 |
| Qty. | 50 pc(s). |
| Product data | IEC: 400 V / 27.5 A<br>UL: 300 V / 18.5 A |
| Packaging | Box |

# OMNIMATE Signal - series BL/SL 5.00
# SL-SMT 5.00HC/09/90 3.2SN BK BX

**Weidmüller Interface GmbH & Co. KG**
Klingenbergstraße 16
D-32758 Detmold
Germany
Fon: +49 5231 14-0
Fax: +49 5231 14-292083
www.weidmueller.com

## Technical data

### Dimensions and weights

| | | | |
|---|---|---|---|
| Width | 45 mm | Width (inches) | 1.772 inch |
| Height | 11.7 mm | Height (inches) | 0.461 inch |
| Height of lowest version | 8.5 mm | Depth | 12 mm |
| Depth (inches) | 0.472 inch | Net weight | 3.92 g |

### System specifications

| | | | |
|---|---|---|---|
| Product family | OMNIMATE Signal - series BL/SL 5.00 | Type of connection | Board connection |
| Mounting onto the PCB | THT/THR solder connection | Pitch in mm (P) | 5 mm |
| Pitch in inches (P) | 0.197 inch | Outgoing elbow | 90° |
| No. of poles | 9 | Number of solder pins per pole | 1 |
| Solder pin length (l) | 3.2 mm | Solder pin length tolerance | +0.1 / -0.3 mm |
| Tolerance of solder pin position | ± 0.1 mm | Solder pin dimensions | d = 1.2 mm, Octagonal |
| Solder pin dimensions = d tolerance | 0 / -0,03 mm | Solder eyelet hole diameter (D) | 1.5 mm |
| Solder eyelet hole diameter tolerance (D) | + 0,1 mm | L1 in mm | 40 mm |
| L1 in inches | 1.575 inch | Number of rows | 1 |
| Pin series quantity | 1 | Can be coded | Yes |
| Plugging cycles | 25 | Plugging force/pole, max. | 7 N |
| Pulling force/pole, max. | 5.5 N | | |

### Material data

| | | | |
|---|---|---|---|
| Insulating material | LCP GF | Colour | Black |
| Colour chart (similar) | RAL 9011 | Insulating material group | IIIa |
| CTI | ≥ 175 | Insulation resistance | ≥ $10^8$ Ω |
| Moisture Level (MSL) | 1 | UL 94 flammability rating | V-0 |
| Contact material | CuMg | Contact surface | tinned |
| Layer structure of solder connection | 1-3 µm Ni / 2-4 µm Sn matt | Layer structure of plug contact | 1-3 µm Ni / 2-4 µm Sn matt |
| Storage temperature, min. | -25 °C | Storage temperature, max. | 55 °C |
| Max. relative humidity during storage | 80 % | Operating temperature, min. | -50 °C |
| Operating temperature, max. | 100 °C | Temperature range, installation, min. | -30 °C |
| Temperature range, installation, max. | 100 °C | | |

### Rated data acc. to IEC

| | | | |
|---|---|---|---|
| tested acc. to standard | IEC 60664-1, IEC 61984 | Rated current, min. no. of poles (Tu=20°C) | 27.5 A |
| Rated current, max. no. of poles (Tu=20°C) | 19 A | Rated current, min. no. of poles (Tu=40°C) | 24 A |
| Rated current, max. no. of poles (Tu=40°C) | 16.5 A | Rated voltage for surge voltage class / pollution degree II/2 | 400 V |
| Rated voltage for surge voltage class / pollution degree III/2 | 320 V | Rated voltage for surge voltage class / pollution degree III/3 | 250 V |
| Rated impulse voltage for surge voltage class/ pollution degree II/2 | 4 kV | Rated impulse voltage for surge voltage class/ pollution degree III/2 | 4 kV |
| Rated impulse voltage for surge voltage class/ contamination degree III/3 | 4 kV | | |

# OMNIMATE Signal - series BL/SL 5.00
# SL-SMT 5.00HC/09/90 3.2SN BK BX

**Weidmüller Interface GmbH & Co. KG**
Klingenbergstraße 16
D-32758 Detmold
Germany
Fon: +49 5231 14-0
Fax: +49 5231 14-292083
www.weidmueller.com

## Technical data

### Rated data acc. to CSA

| | | | |
|---|---|---|---|
| Institute (CSA) | | Certificate No. (CSA) | 200039-1176845 |
| Rated voltage (Use group B / CSA) | 300 V | Rated voltage (Use group D / CSA) | 300 V |
| Rated current (Use group B / CSA) | 15 A | Rated current (Use group D / CSA) | 15 A |
| Reference to approval values | Specifications are maximum values, details - see approval certificate. | | |

### Rated data acc. to UL 1059

| | | | |
|---|---|---|---|
| Institute (UR) | | Certificate No. (UR) | E60693 |
| Rated voltage (Use group B / UL 1059) | 300 V | Rated voltage (Use group D / UL 1059) | 300 V |
| Rated current (Use group B / UL 1059) | 18.5 A | Rated current (Use group D / UL 1059) | 10 A |
| Reference to approval values | Specifications are maximum values, details - see approval certificate. | | |

### Packaging

| | | | |
|---|---|---|---|
| Packaging | Box | VPE length | 42 mm |
| VPE width | 70 mm | VPE height | 168 mm |

### Classifications

| | | | |
|---|---|---|---|
| ETIM 3.0 | EC001284 | ETIM 4.0 | EC002637 |
| ETIM 5.0 | EC002637 | ETIM 6.0 | EC002637 |
| UNSPSC | 30-21-18-10 | eClass 5.1 | 27-26-07-04 |
| eClass 6.2 | 27-26-07-04 | eClass 7.1 | 27-44-04-02 |
| eClass 8.1 | 27-44-04-02 | eClass 9.0 | 27-44-04-02 |
| eClass 9.1 | 27-44-04-02 | | |

### Notes

| | |
|---|---|
| Notes | • Gold-plated contact surfaces on request<br>• Rated current related to rated cross-section & min. No. of poles.<br>• Diameter of solder eyelet D = 1.4+0.1mm<br>• Solder eyelet diameter D = 1.5 + 0.1 mm, from 9 poles<br>• P on drawing = pitch<br>• Rated data refer only to the component itself. Clearance and creepage distances to other components are to be designed in accordance with the relevant application standards. |
| IPC conformity | Conformity: The products are developed, manufactured and delivered according international recognized standards and norms and comply with the assured properties in the data sheet resp. fulfill decorative properties in accordance with IPC-A-610 "Class 2". Further claims on the products can be evaluated on request. |

# OMNIMATE Signal - series BL/SL 5.00
# SL-SMT 5.00HC/09/90 3.2SN BK BX

**Weidmüller Interface GmbH & Co. KG**
Klingenbergstraße 16
D-32758 Detmold
Germany
Fon: +49 5231 14-0
Fax: +49 5231 14-292083
www.weidmueller.com

## Technical data

### Approvals

| | |
|---|---|
| Approvals | |
| ROHS | Conform |

### Downloads

| | |
|---|---|
| Approval/Certificate/Document of Conformity | Declaration of the Manufacturer |
| Brochure/Catalogue | FL DRIVES EN<br>MB SMT EN<br>FL DRIVES DE<br>MB DEVICE MANUF. EN<br>CAT 2 PORTFOLIOGUIDE EN<br>FL BUILDING SAFETY EN<br>FL APPL LED LIGHTING EN<br>FL INDUSTR.CONTROLS EN<br>FL MACHINE SAFETY EN<br>FL HEATING ELECTR EN<br>FL APPL_INVERTER EN<br>FL_BASE_STATION_EN<br>FL ELEVATOR EN<br>FL POWER SUPPLY EN<br>FL 72H SAMPLE SER EN<br>PO OMNIMATE EN |
| SMT white paper | Download Whitepaper |

# OMNIMATE Signal - series BL/SL 5.00
# SL-SMT 5.00HC/09/90 3.2SN BK BX

**Weidmüller Interface GmbH & Co. KG**
Klingenbergstraße 16
D-32758 Detmold
Germany
Fon: +49 5231 14-0
Fax: +49 5231 14-292083
www.weidmueller.com

## Drawings

### Dimensional drawing

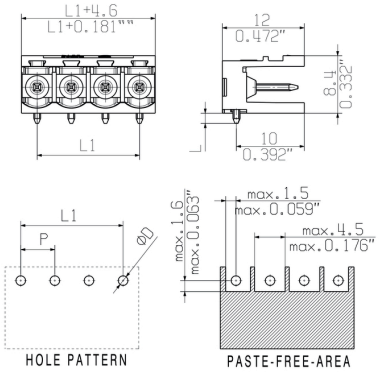


### Graph

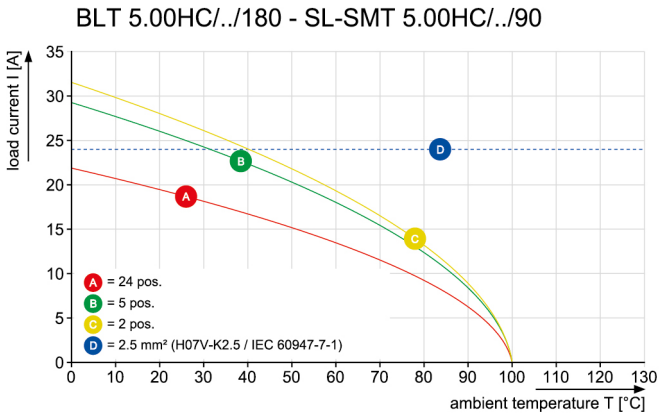

# Wave Solder Profile

## Recommended wave solderding profiles

**Weidmüller Interface GmbH & Co. KG**
Klingenbergstraße 16
D-32758 Detmold
Germany
Fon: +49 5231 14-0
Fax: +49 5231 14-292083
www.weidmueller.com

**Single Wave:**

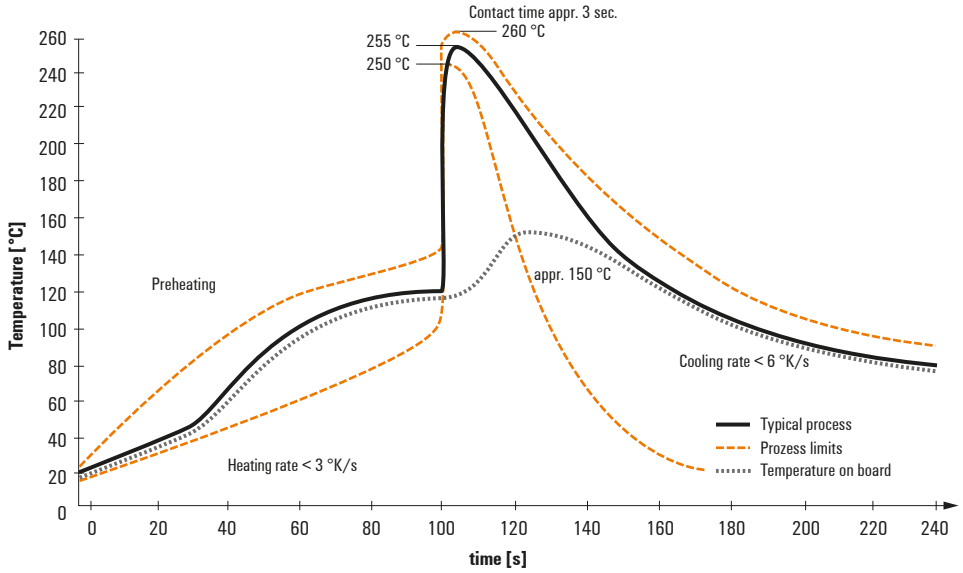


**Double Wave:**

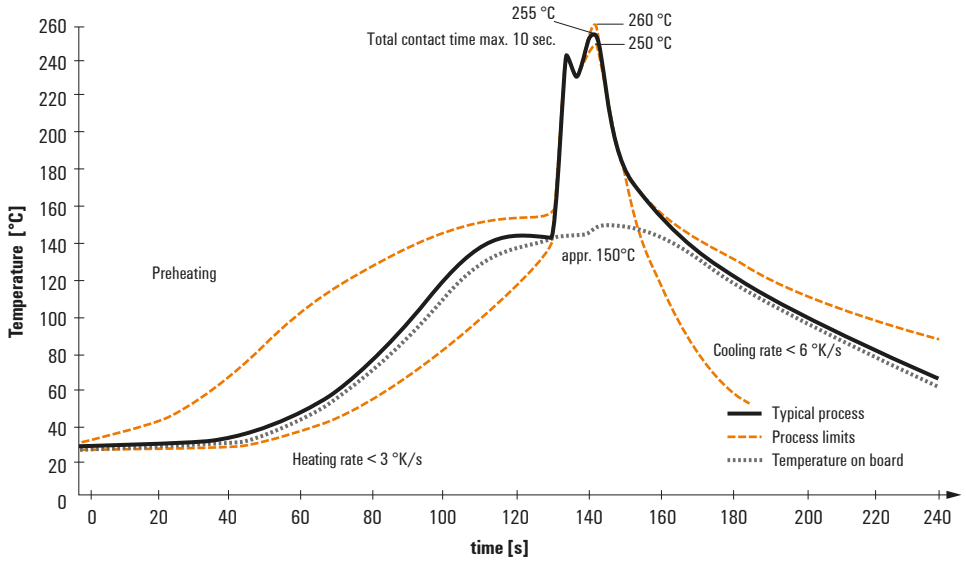


**Wave soldering profiles**

Wired connection elements should be processed in accordance with the DIN EN 61760-1 standard. We have included two recommendations for practical wave soldering profiles, with which Weidmüller PCB terminals and connectors are qualified.

When choosing a suitable profile for your application, the following factors also need to be considered:
- PCB thickness
- Proportion of Cu in the layers
- Single/double-sided assembly
- Product range
- Heating and cooling rates

The single and double wave profiles each indicate the recommended operating range, including the maximum soldering temperature of 260°C. In practice, the maximum soldering temperature is quite often well below the above maximum profile.

We reserve the right to make technical changes.

# Reflow Solder Profile

## Recommended reflow soldering profile

**Weidmüller Interface GmbH & Co. KG**
Klingenbergstraße 16
D-32758 Detmold
Germany
Fon: +49 5231 14-0
Fax: +49 5231 14-292083
www.weidmueller.com

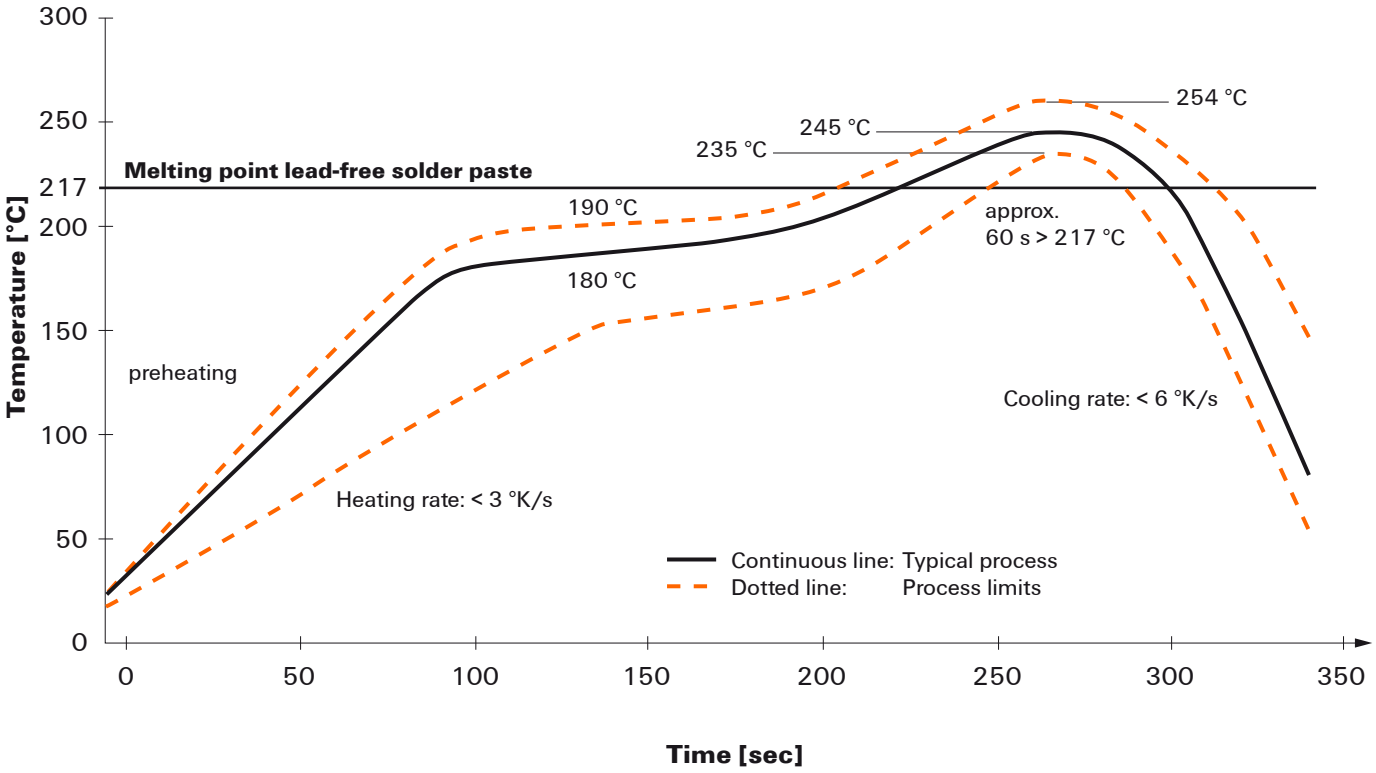


**Reflow soldering profile**

The perfect soldering profile for SMT Surface Mount Technology is one the most exiting question in SMT production. But there are more than one correct answer: The diagram of temperature-on-time is related to processing features of solder paste and to maximum load of components.

We have to consider the following parameters:
- Time for pre heating
- Maximum temperature
- Time above melting point
- Time for cooling
- Maximum heating rate
- Maximum cooling rate

We recommend a typical solder profile with associated process limits. With preheating components and board are prepared smoothly for the solder phase. Heating rate is typically ≤ +3K/s. In parallel the solder paste is ‚activated'. The time above melting point of 217°C the paste gets liquid and components and boards begin to connect. The maximum temperature of 245°C to 254°C should stay between 10 and 40 seconds. In the cooling phase at ≥ -6K/s solder is cured. Board and components cool down while avoiding cold cracks.

We reserve the right to make technical changes.