18000 series

Snap-action momentary pushbutton switches

DISTINCTIVE FEATURES

Panel and PC mount models
Snap-in panel mounting version
Tactile feedback

ELECTRICAL SPECIFICATIONS

- Max. current/voltage rating with resistive load :
  - gold plated brass contacts : 100 mA - 30 VDC
  - gold plated silver contacts : 1 A 30 VDC
- Initial contact resistance : 50 mΩ max.
- Insulation resistance : 1,000 MΩ min.
- Dielectric strength : 1,000 Vrms 50 Hz min.
- Electrical life : 60,000 cycles at full load

GENERAL SPECIFICATIONS

- Total travel : 0.5 mm (.019)
- Torque : 1.25 Nm (.922 Ft.lb) max. applied to nut
- Operating temperature : -30 °C to +65 °C (-22 °F to +149 °F)
- Soldering : 300 °C (572 °F), 3 sec. max.

MATERIALS

- Case : PBT
- Actuator : polyamide, glass filled
- Bushing : brass, nickel plated
- Housing : stainless steel
- Bracket : tin plated steel
- Contacts
  AD : silver, gold plated
  CD : brass, gold plated
- Terminal seal : epoxy

APEM products may be recycled at end-of-life for the re-claiming of valuable metal components.

The company reserves the right to change specifications without notice.

18000 series

Snap-action momentary pushbutton switches

TERMINALS

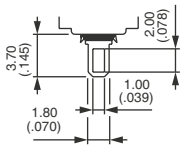

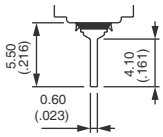

ELECTRICAL FUNCTION

→ KEYWAY

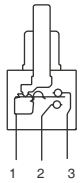

Plain bushing

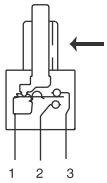

Threaded bushing

PANEL CUT-OUT

18500 - 18200

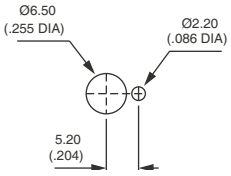

18700 - 18900

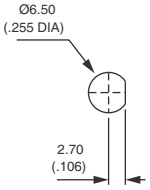

18800

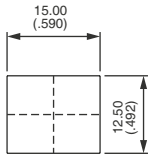

With bezel **U1200**

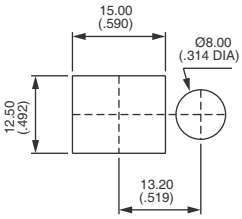

With bezel **U1210** for LED

18000 series

Snap-action momentary pushbutton switches

BUILD YOUR PART NUMBER

BASIC PART NUMBER

18

SERIES

TERMINALS AND BUSHINGS

2	Straight PC terminals with Ø 6.35 (1/4) threaded bushing Straight PC terminals + bracket or right angle terminals with plain bushing
5	Solder lug terminals with Ø 6.35 (1/4) threaded bushing.
7	Solder lug terminals with Ø 6.35 (1/4) flatted bushing.
8	Solder lug terminals, snap-in mounting
9	Straight PC terminals with Ø 6.35 (1/4) flatted bushing.

NUMBER OF POLES

3	Single pole
4	Double pole

ELECTRICAL FUNCTION

5	ON - MOM

TERMINALS

Blank	Solder lugs or straight PC depending on model
W	Right angle, horizontal mounting
WW	Right angle, vertical mounting
Y	Bracket mounting

OPTIONS

CONTACT MATERIALS

AD	Silver, gold plated
CD	Brass, gold plated

SPECIAL OPTIONS

X624	Shorter bushing and plunger
X662	Snap-in mounting and straight PC terminals

BEZELS

U1200 U1210 for LED	For snap-in mounting models
U3200	For bracket mounting models

PLUNGERS

Blank	Ø 4 (.157), long
-6	Ø 3.1 (.122), length 5.85 mm (.230)
-3	Ø 4 (.157), short
-5	Ø 3.1 (.122), length 6.3 mm (.248)

CAPS FOR PLUNGERS

Round	Ø 5 (.196), Ø 8 (.314), Ø 9.4 (.370), Ø 10 (.393) - standard, Ø 15 (.590)
Square	Height 4 (.157), Height 6 (.236)

ABOUT THIS SERIES

On the following pages, you will find successively basic part numbers of switches and options in the same order as in above chart.

Notice : please note that not all combinations of above numbers are available. Refer to following pages for further information.

Sealing boots are available to protect the switches against dust and water. See "Sealing Boots" section on website.

Mounting accessories : standard hardware supplied with all models with Ø 6,35 (1/4) threaded bushing : 2 hex nuts 8 mm (.314) across flats, 1 locking ring and 1 lockwasher. Standard and special hardware is presented in the "Hardware" section of website.

18000 series

Snap-action momentary pushbutton switches

THREADED BUSHING SOLDER LUG TERMINALS : 18500

	1-3	1-2
Single pole		
18535	ON	MOM
Double pole		
18545	ON	MOM

→ KEYWAY Shown with standard plunger

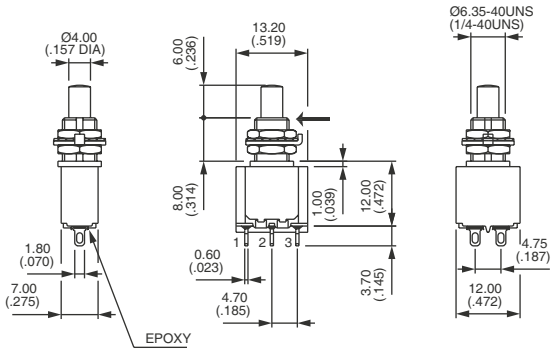

FLATTED BUSHING SOLDER LUG TERMINALS : 18700

	1-3	1-2
Single pole		
18735	ON	MOM
Double pole		
18745	ON	MOM

→ KEYWAY

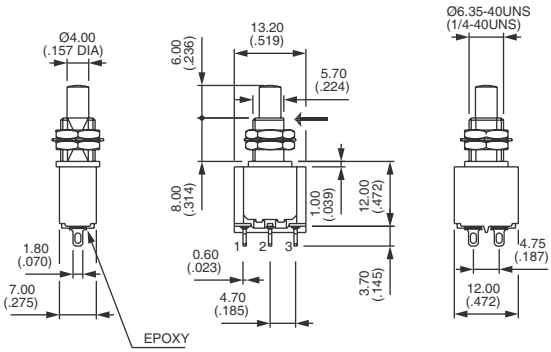

THREADED BUSHING STRAIGHT PC TERMINALS : 18200

	1-3	1-2
Single pole		
18235	ON	MOM
Double pole		
18245	ON	MOM

→ KEYWAY

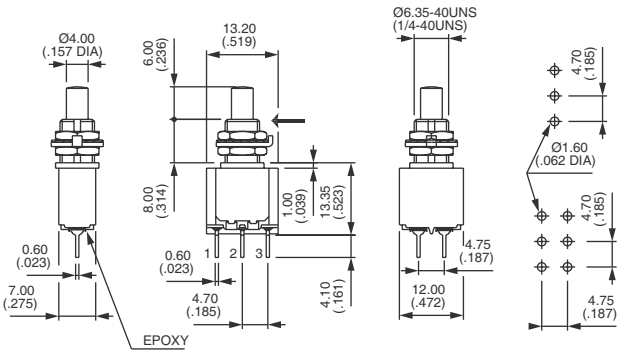

FLATTED BUSHING - STRAIGHT PC TERMINALS : 18900

	1-3	1-2
Single pole		
18935	ON	MOM
Double pole		
18945	ON	MOM

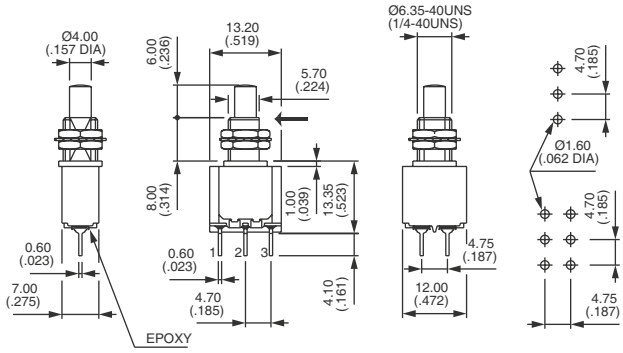

18000 series

Snap-action momentary pushbutton switches

SNAP-IN MOUNTING
SOLDER LUG TERMINALS : 18800

	1-3	1-2
Single pole		
18835	ON	MOM
Double pole		
18845	ON	MOM

Available with straight PC terminals : see X662 under "Special options"

Shown with cap U910 + U1200

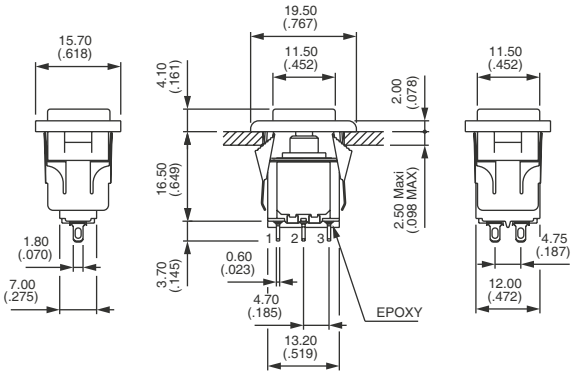

STRAIGHT PC TERMINALS
BRACKET MOUNTING - SINGLE POLE : 18230Y

18235Y	ON	MOM

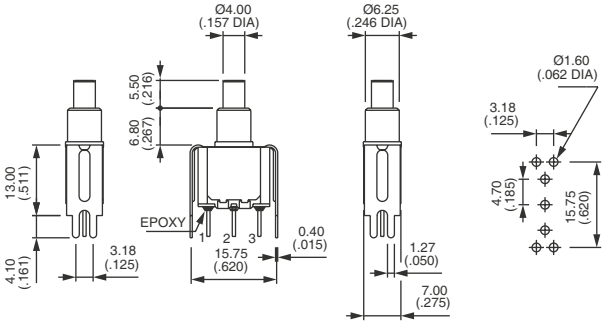

STRAIGHT PC TERMINALS
BRACKET MOUNTING - DOUBLE POLE : 18240Y

18245Y	ON	MOM

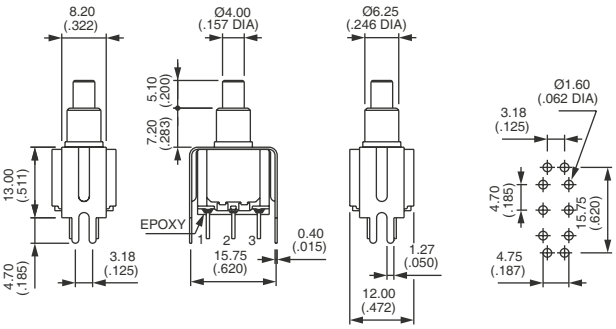

RIGHT ANGLE TERMINALS
HORIZONTAL : 18200W

Single pole		
18235W	ON	MOM
Double pole		
18245W	ON	MOM

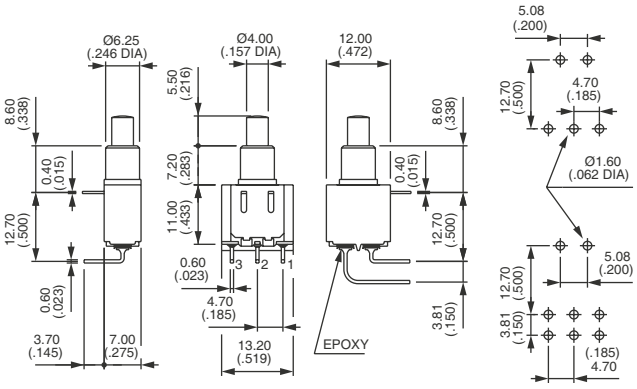

18000 series

Snap-action momentary pushbutton switches

PLAIN BUSHING - RIGHT ANGLE TERMINALS VERTICAL : 18200WW

	1-3	1-2
Single pole		
18235WW	ON	MOM
Double pole		
18245WW	ON	MOM

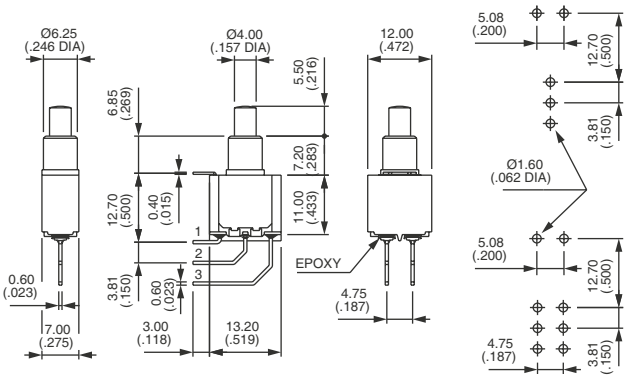

CONTACT MATERIALS

BASIC P/N

AD Silver, gold plated
CD Brass, gold plated

PLUNGERS

BASIC P/N

Dash compulsory before plunger code.

Blank Ø 4 (.157) - long
-6 Ø 3.1 (.122)
-3 Ø 4 (.157) - short
-5 Ø 3.1 (.122)

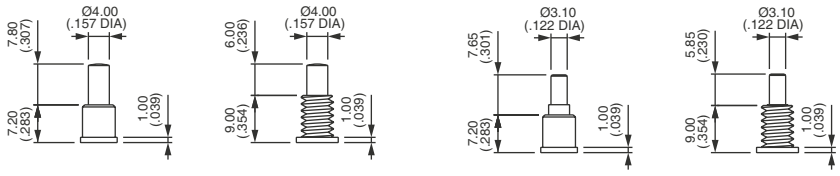

Blank -6

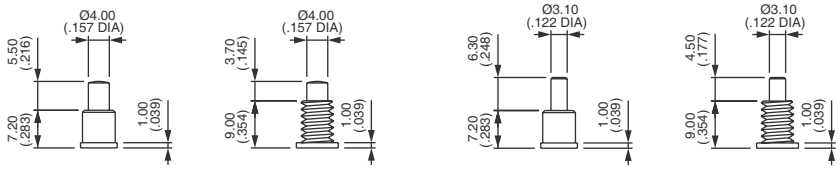

-3 -5

SPECIAL OPTIONS

BASIC P/N

X371 Plain bushing Ø 6.25 mm (.246) (instead of standard threaded bushing).

X372 Shorter threaded bushing Ø 6.35 (1/4). **Height 7 mm (.274).**

X371 X372

18000 series

Snap-action momentary pushbutton switches

SPECIAL OPTIONS
(CONTINUED)

BASIC P/N

X386 Threaded bushing Ø 6.35 mm (1/4) to replace plain bushing on models W - WW and Y.

X438 Plain bushing Ø 6.25 mm (.246). **Height 7,2 mm (.283) - without shoulder.**

X624 Straight PC terminals - bracket mounting - with shorter bushing and plunger

X662 Snap-in mounting - straight PC terminals

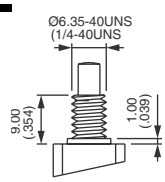

X386

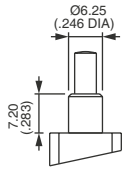

X438

OPTION X624 - SINGLE POLE

18235Y -2X624

ON MOM

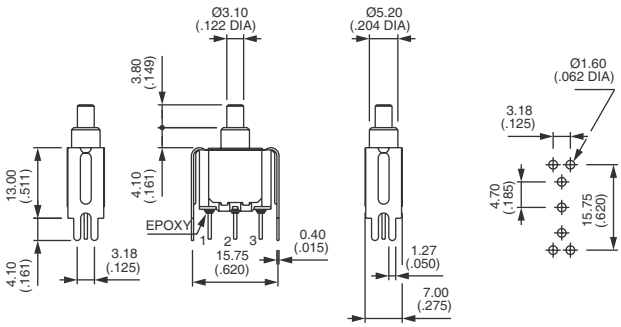

OPTION X624 - DOUBLE POLE

18245Y -2X624

ON MOM

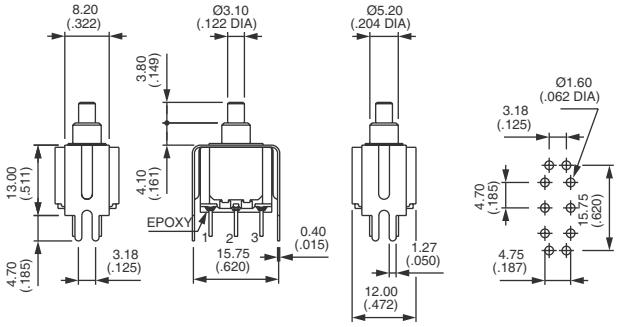

OPTION X662

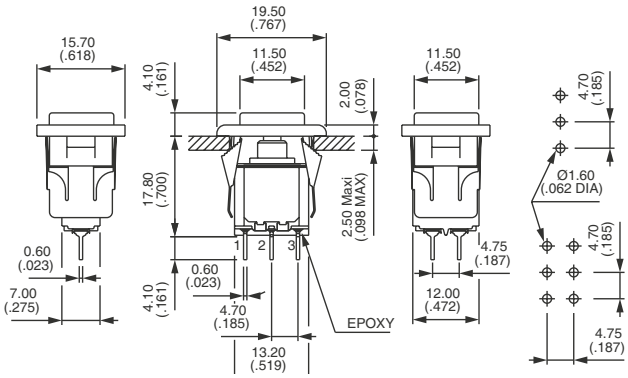

18000 series

Snap-action momentary pushbutton switches

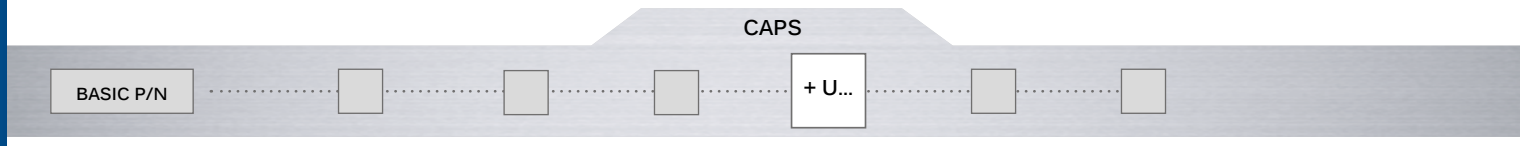

For cap colors, replace last "0" by number :

1	Blue	5	Yellow
1/4	Dark blue	6	Red
2	Black	7	Ivory
3	Green	7/1	White
4	Grey	9	Orange

CAPS FOR Ø 4 (.157) PLUNGERS (-13, -3)

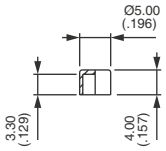

U900

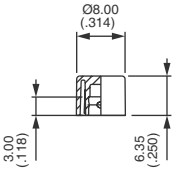

U1140

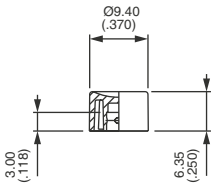

U1720

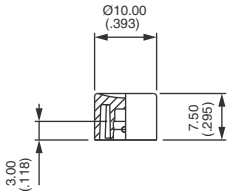

U480

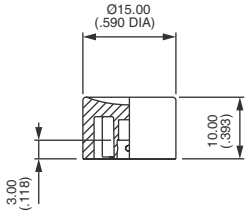

U630

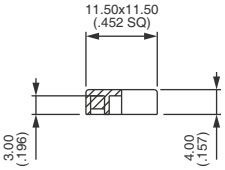

U2430
Square

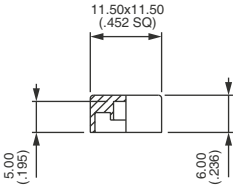

U2020
Square

CAPS FOR Ø 3.1 (.122) PLUNGERS (-5, -6)

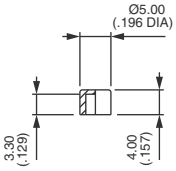

U2400

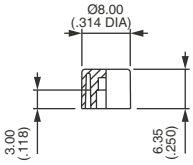

U2510

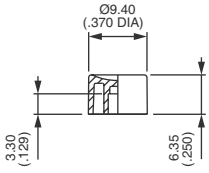

U2130

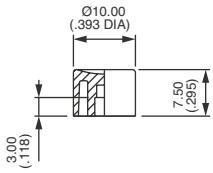

U2900

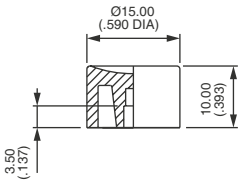

U3400

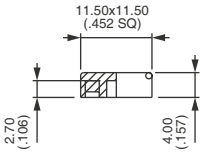

U910
Square

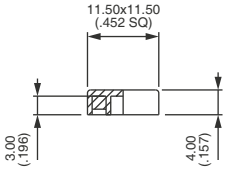

U2430
Square

CAPS FOR Ø 3.1 (.122) PLUNGERS (-5, -6)

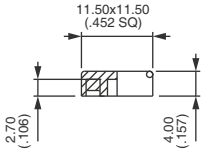

U910
Square

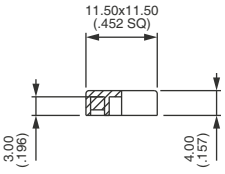

U2430
Square

18000 series

Snap-action momentary pushbutton switches

BEZELS

BASIC P/N ..... + U...

For cap colors, replace last "0" by number :

1	Blue	5	Yellow
1/4	Dark blue	6	Red
2	Black	7	Ivory
3	Green	7/1	White
4	Grey	9	Orange

STANDARD PANEL MOUNTING

Panel thickness with bezel : 1 mm (.039) to 2.5 mm (.098)

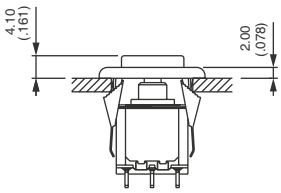

18800 + U910 + U1200

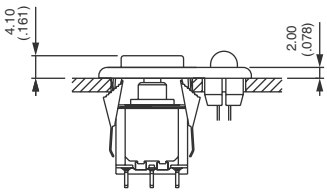

18800 + U910 + U1210

FOR BRACKET MOUNTING MODELS (18200Y & 18200YX624)

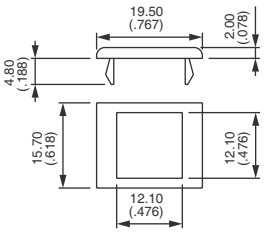

U3200

FOR SNAP-IN MODELS (18800 - 18800X662)

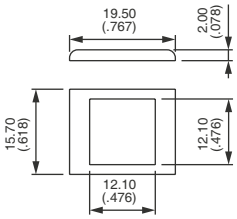

U1200

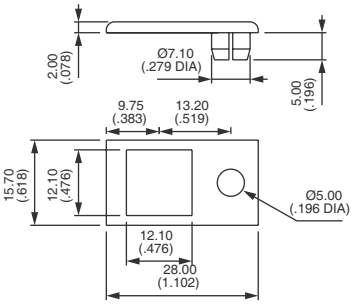

U1210
For LED Ø 5 - not supplied

DRESS NUTS

Order separately. For models with threaded bushing (18500 - 18700 - 18200 - 18900)
Chrome plated.

U1636 For caps U1140 and U2510
U840 For cap U480 and U2900
U825 For caps U630 and U3400

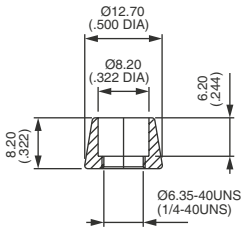

U1636

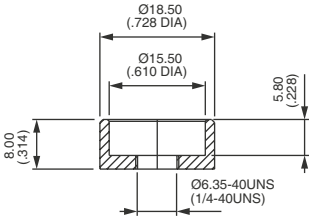

U840

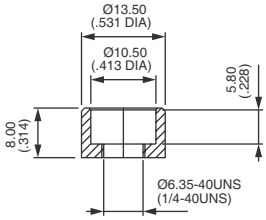

U825

18000 series

Snap-action momentary pushbutton switches • high currents

DISTINCTIVE FEATURES

Tactile feedback

High currents

ELECTRICAL SPECIFICATIONS

- Max. current/voltage rating with resistive load : 7 A 30 VDC
- Initial contact resistance : 20 mΩ max. at 0.1 A 3 VDC
- Insulation resistance : 200,000 MΩ min. between terminals and frame
- Dielectric strength : 1,500 Vrms 50 Hz min.
- Electrical life : 60,000 cycles at full load

GENERAL SPECIFICATIONS

- Total travel : 0.9 mm (.035) approx.
- Operating temperature : -30 °C to +65 °C (-22 °F to +149 °F)

MATERIALS

- Case : diallylphthalate (DAP)
- Actuator : glass filled polyester
- Bushing : brass, nickel plated
- Housing : stainless steel
- Contacts : silver
- Terminal seal : epoxy

APEM products may be recycled at end-of-life for the re-claiming of valuable metal components.

ELECTRICAL FUNCTION

→ KEYWAY

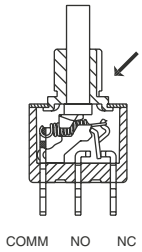

PANEL CUT-OUT

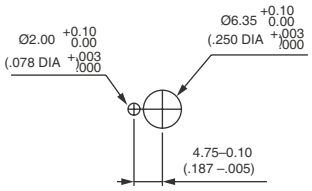

18000 series

Snap-action momentary pushbutton switches • high currents

THREADED BUSHING - SINGLE POLE

18635A

ON

MOM

Also available in double pole configuration.

→ KEYWAY

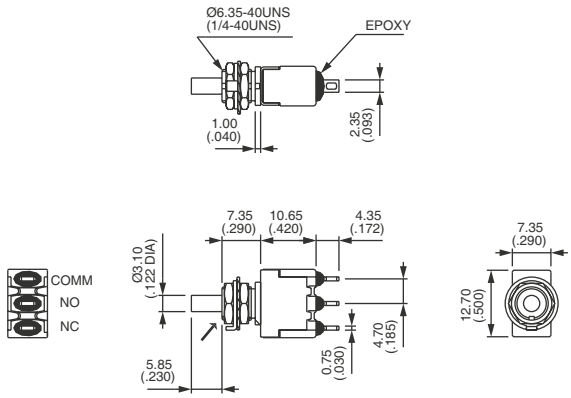

CAPS

BASIC P/N ..... + U...

ROUND

U2400 Ø 5 (.196)
U2510 Ø 8 (.314)
U2130 Ø 9,4 (.370)
U2900 Ø 10 (.393)
U3400 Ø 15 (.590)

SQUARE

U910 Height 4 (.157)
U2340 Height 6 (.236)

For cap dimensions, see “Caps for Ø 3,1 (.122) plungers” on the preceding pages.