OMNIMATE Signal - series LP
LP 5.08/03/90 3.2SN BK BX

Weidmüller Interface GmbH & Co. KG
Klingenbergstraße 16
D-32758 Detmold
Germany
Fon: +49 5231 14-0
Fax: +49 5231 14-292083
www.weidmueller.com

Product image

Similar to illustration

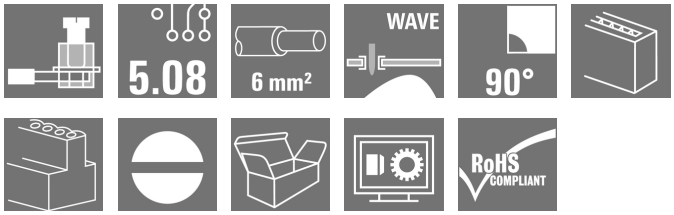

This PCB terminal provides connections for 32 A and 6 mm² conductor cross-section with proven clamping yoke connection at 5.00 and 5.08 mm pitch, conductor outlet direction in 90°, 135° and 180° design, with extensive auxiliary functions.

General ordering data

Delivery status	This article will no longer be available in the future.
Available until	2018-12-31
Type	LP 5.08/03/90 3.2SN BK BX
Order No.	1753420000
Version	Printed circuit board terminals, 5.08 mm, No. of poles: 3, 90°, Solder pin length (l): 3.2 mm, tinned, black, Screw connection, Clamping range, max. : 6 mm², Box
GTIN (EAN)	4032248010219
Qty.	100 pc(s).
Product data	IEC: 500 V / 32 A / 0.5 - 6 mm² UL: 300 V / 20 A / AWG 26 - AWG 12
Packaging	Box
Alternative product	1067570000

OMNIMATE Signal - series LP
LP 5.08/03/90 3.2SN BK BX

Weidmüller Interface GmbH & Co. KG
Klingenbergstraße 16
D-32758 Detmold
Germany
Fon: +49 5231 14-0
Fax: +49 5231 14-292083
www.weidmueller.com

Technical data

Dimensions and weights

Width	15.84 mm	Width (inches)	0.624 inch
Height	20.2 mm	Height (inches)	0.795 inch
Height of lowest version	17 mm	Depth	11 mm
Depth (inches)	0.433 inch	Net weight	4.56 g

System parameters

Product family	OMNIMATE Signal - series LP	Wire connection method	Screw connection
Mounting onto the PCB	THT solder connection	Conductor outlet direction	90°
Pitch in mm (P)	5.08 mm	Pitch in inches (P)	0.2 inch
No. of poles	3	Fitted by customer	Yes
Max. adjacent poles per row	24	Solder pin length (l)	3.2 mm
Solder pin dimensions	0.75 x 0.9 mm	Solder eyelet hole diameter (D)	1.3 mm
Solder eyelet hole diameter tolerance (D)	+ 0,1 mm	Number of solder pins per pole	1
Screwdriver blade	0.6 x 3.5	Screwdriver blade standard	DIN 5264
Tightening torque, min.	0.5 Nm	Tightening torque, max.	0.6 Nm
Clamping screw	M 3	Stripping length	6 mm
L1 in mm	10.16 mm	L1 in inches	0.4 inch
Touch-safe protection acc. to DIN VDE 0470	IP 20	Touch-safe protection acc. to DIN VDE 57 106	Safe from finger touch
Volume resistance	1.20 mΩ		

Material data

Insulating material	PA	Colour code	black
Colour chart (similar)	RAL 9011	Insulating material group	I
CTI	≥ 600	Insulation strength	≥ 10^8 Ω
UL 94 flammability rating	V-2	Contact material	Copper alloy
Contact surface	tinned	Coating	1-3 µm Ni, 4-6 µm SN
Tinning type	matt	Layer structure of solder connection	4-6 µm Ni / 4-6 µm Sn
Storage temperature, min.	-25 °C	Storage temperature, max.	55 °C
Max. relative humidity during storage	80 %	Operating temperature, min.	-50 °C
Operating temperature, max.	100 °C	Temperature range, installation, min.	-25 °C
Temperature range, installation, max.	100 °C		

Conductors suitable for connection

Clamping range, min.	0.13 mm²
Clamping range, max.	6 mm²
Wire connection cross section AWG, min.	AWG 26
Wire connection cross section AWG, max.	AWG 12
Solid, min. H05(07) V-U	0.5 mm²
Solid, max. H05(07) V-U	6 mm²
Flexible, min. H05(07) V-K	0.5 mm²
Flexible, max. H05(07) V-K	4 mm²
w. plastic collar ferrule, DIN 46228 pt 4, min.	0.5 mm²
w. plastic collar ferrule, DIN 46228 pt 4, max.	2.5 mm²
w. wire end ferrule, DIN 46228 pt 1, min	0.5 mm²
w. wire end ferrule, DIN 46228 pt 1, max.	2.5 mm²

OMNIMATE Signal - series LP
LP 5.08/03/90 3.2SN BK BX

Weidmüller Interface GmbH & Co. KG
Klingenbergstraße 16
D-32758 Detmold
Germany
Fon: +49 5231 14-0
Fax: +49 5231 14-292083
www.weidmueller.com

Technical data

Plug gauge in accordance with EN 60999 a x b; ø	2.8 mm x 2.4 mm; 3.0 mm			
Clampable conductor	Cross-section for conductor connection	Type	fine-wired	
		nominal	0.5 mm²	
	AEH	Stripping length	nominal	8 mm
		Stripping length	nominal	6 mm
	Cross-section for conductor connection	Type	fine-wired	
		nominal	0.75 mm²	
	AEH	Stripping length	nominal	8 mm
		Stripping length	nominal	6 mm
	Cross-section for conductor connection	Type	fine-wired	
		nominal	1 mm²	
	AEH	Stripping length	nominal	8 mm
		Stripping length	nominal	6 mm
Max. clamping range	6 mm²			

Rated data acc. to IEC

tested acc. to standard	IEC 60664-1, IEC 61984	Rated current, min. no. of poles (Tu=20°C)	32 A
Rated current, max. no. of poles (Tu=20°C)	30.5 A	Rated current, min. no. of poles (Tu=40°C)	32 A
Rated current, max. no. of poles (Tu=40°C)	25 A	Rated voltage for surge voltage class / pollution degree II/2	500 V
Rated voltage for surge voltage class / pollution degree III/2	250 V	Rated voltage for surge voltage class / pollution degree III/3	250 V
Rated impulse voltage for surge voltage class/ pollution degree II/2	4 kV	Rated impulse voltage for surge voltage class/ pollution degree III/2	4 kV
Rated impulse voltage for surge voltage class/ contamination degree III/3	4 kV	Short-time withstand current resistance	3 x 1s with 120 A

Rated data acc. to CSA

Institute (CSA)		Certificate No. (CSA)	200039-1202191
Rated voltage (Use group B / CSA)	300 V	Rated voltage (Use group D / CSA)	300 V
Rated current (Use group B / CSA)	20 A	Rated current (Use group D / CSA)	10 A
Wire cross-section, AWG, min.	AWG 26	Wire cross-section, AWG, max.	AWG 12
Reference to approval values	Specifications are maximum values, details - see approval certificate.		

Rated data acc. to UL 1059

Institute (UR)		Certificate No. (UR)	E60693
Rated voltage (Use group B / UL 1059)	300 V	Rated voltage (Use group D / UL 1059)	300 V
Rated current (Use group B / UL 1059)	20 A	Rated current (Use group D / UL 1059)	10 A
Wire cross-section, AWG, min.	AWG 26	Wire cross-section, AWG, max.	AWG 12
Reference to approval values	Specifications are maximum values, details - see approval certificate.		

OMNIMATE Signal - series LP
LP 5.08/03/90 3.2SN BK BX

Weidmüller Interface GmbH & Co. KG
Klingenbergstraße 16
D-32758 Detmold
Germany
Fon: +49 5231 14-0
Fax: +49 5231 14-292083
www.weidmueller.com

Technical data

Packing

Packaging	Box	VPE length	65 mm
VPE width	105 mm	VPE height	115 mm

Classifications

ETIM 3.0	EC001284	ETIM 4.0	EC002643
ETIM 5.0	EC002643	ETIM 6.0	EC002643
UNSPSC	30-21-18-01	eClass 6.2	27-26-11-01
eClass 7.1	27-44-04-01	eClass 8.1	27-44-04-01
eClass 9.0	27-44-04-01	eClass 9.1	27-44-04-01

Notes

Notes	• Additional colours on request • Rated current related to rated cross-section & min. No. of poles. • Wire end ferrule without plastic collar to DIN 46228/1 • Wire end ferrule with plastic collar to DIN 46228/4 • P on drawing = pitch • Rated data refer only to the component itself. Clearance and creepage distances to other components are to be designed in accordance with the relevant application standards.
IPC conformity	Conformity: The products are developed, manufactured and delivered according international recognized standards and norms and comply with the assured properties in the data sheet resp. fulfill decorative properties in accordance with IPC-A-610 "Class 2". Further claims on the products can be evaluated on request.

Approvals

Approvals	
ROHS	Conform

Downloads

Approval/Certificate/Document of Conformity	Declaration of the Manufacturer
Brochure/Catalogue	FL DRIVES EN FL ANALO.SIGN.CONV. EN MB DEVICE MANUF. EN FL DRIVES DE FL BUILDING SAFETY EN FL APPL LED LIGHTING EN FL INDUSTR.CONTROLS EN FL MACHINE SAFETY EN FL HEATING ELECTR EN FL APPL_INVERTER EN FL_BASE_STATION_EN FL ELEVATOR EN FL POWER SUPPLY EN FL 72H SAMPLE SER EN PO OMNIMATE EN
Engineering Data	WSCAD

Creation date May 13, 2019 12:18:45 PM CEST

OMNIMATE Signal - series LP
LP 5.08/03/90 3.2SN BK BX

Weidmüller Interface GmbH & Co. KG
Klingenbergstraße 16
D-32758 Detmold
Germany
Fon: +49 5231 14-0
Fax: +49 5231 14-292083
www.weidmueller.com

Drawings

Dimensional drawing

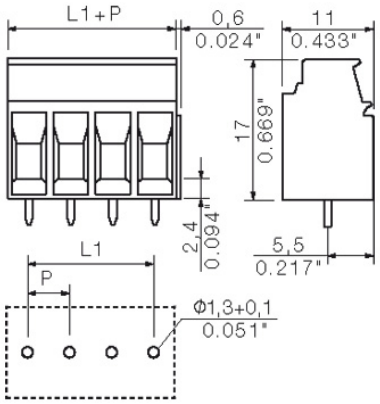

Graph

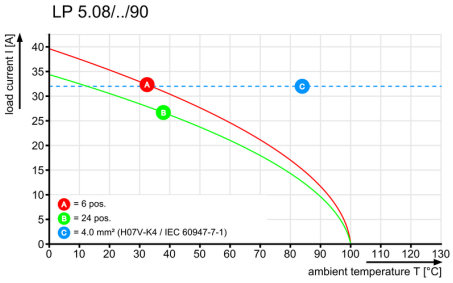

MASSE OHNE TOLERANZ SIND KEINE PRUEFMASSE
DIMS. WITHOUT TOLERANCE ARE NOT CONTROL DIMS.

DIE DEUTSCHE VERSION IST VERBINDLICH
THE GERMAN VERSION IS BINDING

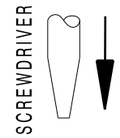

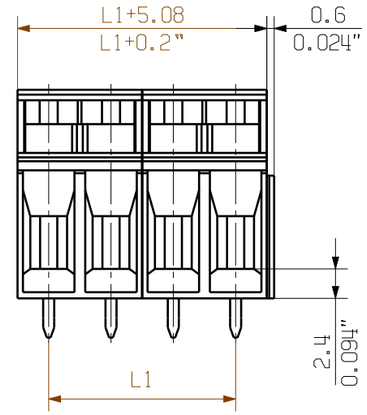

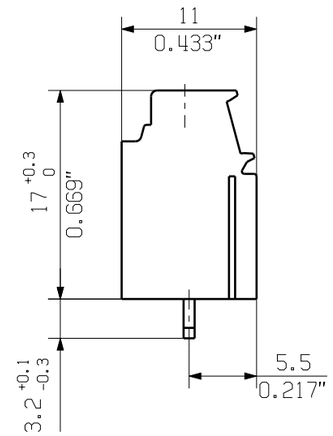

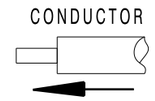

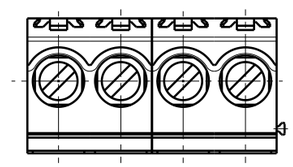

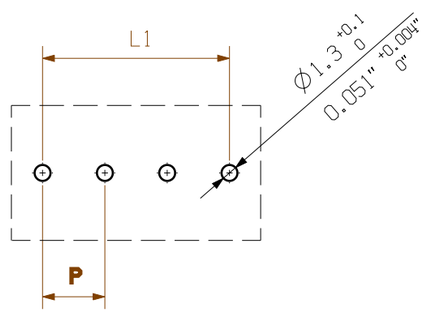

HOLE PATTERN

n	L1 [mm]	L1 [Inch]
24	116,84	4,600
23	111,76	4,400
22	106,68	4,200
21	101,60	4,000
20	96,52	3,800
19	91,44	3,600
18	86,36	3,400
17	81,28	3,200
16	76,20	3,000
15	71,12	2,800
14	66,04	2,600
13	60,96	2,400
12	55,88	2,200
11	50,80	2,000
10	45,72	1,800
9	40,64	1,600
8	35,56	1,400
7	30,48	1,200
6	25,40	1,000
5	20,32	0,800
4	15,24	0,600
3	10,16	0,400
2	5,08	0,200

SHOWN: LP 5.08/../90 ...

For the mounting of PCBs, it should be noted that the rated data relates only to the PCB components alone.

The neccessary creepage and clearance paths must be observed in connection with the respective applicant in accordance to IEC 664 / VDE 0110.
The current-carrying capacity and pitch tolerance is to be determined according to DIN IEC 326 part 3 very fine.

Weidmüller PCB components are tested to the DIN EN 61984 standard, and are valid for its field of application.
Provided that the components are used to the intended purpose, all requirements with respect to the occuring of electrical, mechanical, thermic and corrosive stress will be satisfied.

RoHS COMPLIANT

METRIC TOLERANCES
X. = ±0.3
X.X = ±0.1
X.XX = ±0.05

53546/5
06.10.10 01
HOHLBEIN_K
MODIFICATION

CAT.NO.: .

Weidmüller

C 33244 (12)
DRAWING NO. ISSUE NO.
SHEET 01 OF 01 (12) SHEETS

	DATE	NAME
DRAWN	22.09.2008	HELIS_MA
RESPONSIBLE		KRUG_M
CHECKED	11.10.2010	HECKERT_M
APPROVED		HECKERT_M

SCALE: 2/1
SUPERSEDES: .

(12) LP 5.08/../90 ...
LEITERPLATTEN-ANSCHLUSSKLEMME
PCB-TERMINAL

PRODUCT FILE: LP../90 7360

WEITERGABE SOWIE VERVIELFAELTIGUNG DIESES DOKUMENTS, VERWERTUNG UND MITTEILUNG SEINES INHALTS SIND VERBOTEN, SOWEIT NICHT AUSDRUECKLICH GESTATTET.
ZUWIDERHANDLUNGEN VERPFLICHTEN ZU SCHADENERSATZ. ALLE RECHTE FUER DEN FALL DER PATENT-, GEBRAUCHSMUSTER- ODER GESCHMACKSMUSTEREINTRAGUNG VORBEHALTEN.
THE REPRODUCTION, DISTRIBUTION AND UTILIZATION OF THIS DOCUMENT AS WELL AS THE COMMUNICATION OF ITS CONTENTS TO OTHERS WITHOUT EXPLICID AUTHORIZATION IS PROHIBITED.
OFFENDERS WILL BE HELD LIABLE FOR THE PAYMENT OF DAMAGES. WEIDMUELLER EXCLUSIVELY RESERVES THE RIGHT TO FILE FOR PATENTS, UTILITY MODELS OR DESIGNS.
© WEIDMUELLER INTERFACE GmbH & Co.KG

Recommended wave solderding profiles

Weidmüller Interface GmbH & Co. KG
Klingenbergstraße 16
D-32758 Detmold
Germany
Fon: +49 5231 14-0
Fax: +49 5231 14-292083
www.weidmueller.com

Single Wave:

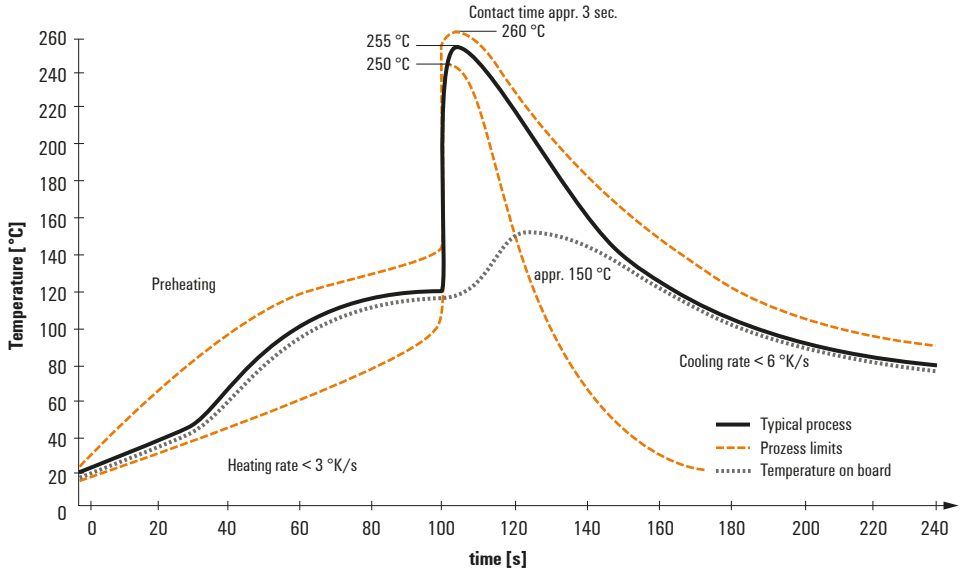

Double Wave:

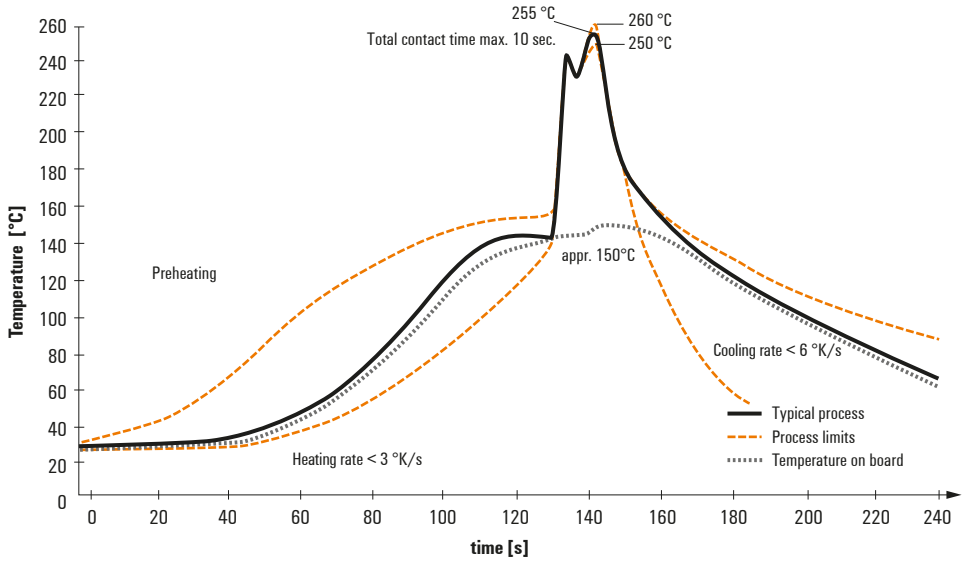

Wave soldering profiles

Wired connection elements should be processed in accordance with the DIN EN 61760-1 standard. We have included two recommendations for practical wave soldering profiles, with which Weidmüller PCB terminals and connectors are qualified.

When choosing a suitable profile for your application, the following factors also need to be considered:
- PCB thickness
- Proportion of Cu in the layers
- Single/double-sided assembly
- Product range
- Heating and cooling rates

The single and double wave profiles each indicate the recommended operating range, including the maximum soldering temperature of 260°C. In practice, the maximum soldering temperature is quite often well below the above maximum profile.

We reserve the right to make technical changes.