Amphenol

164-SERIES
WATERPROOF AUDIO CONNECTORS
AC16403 0118

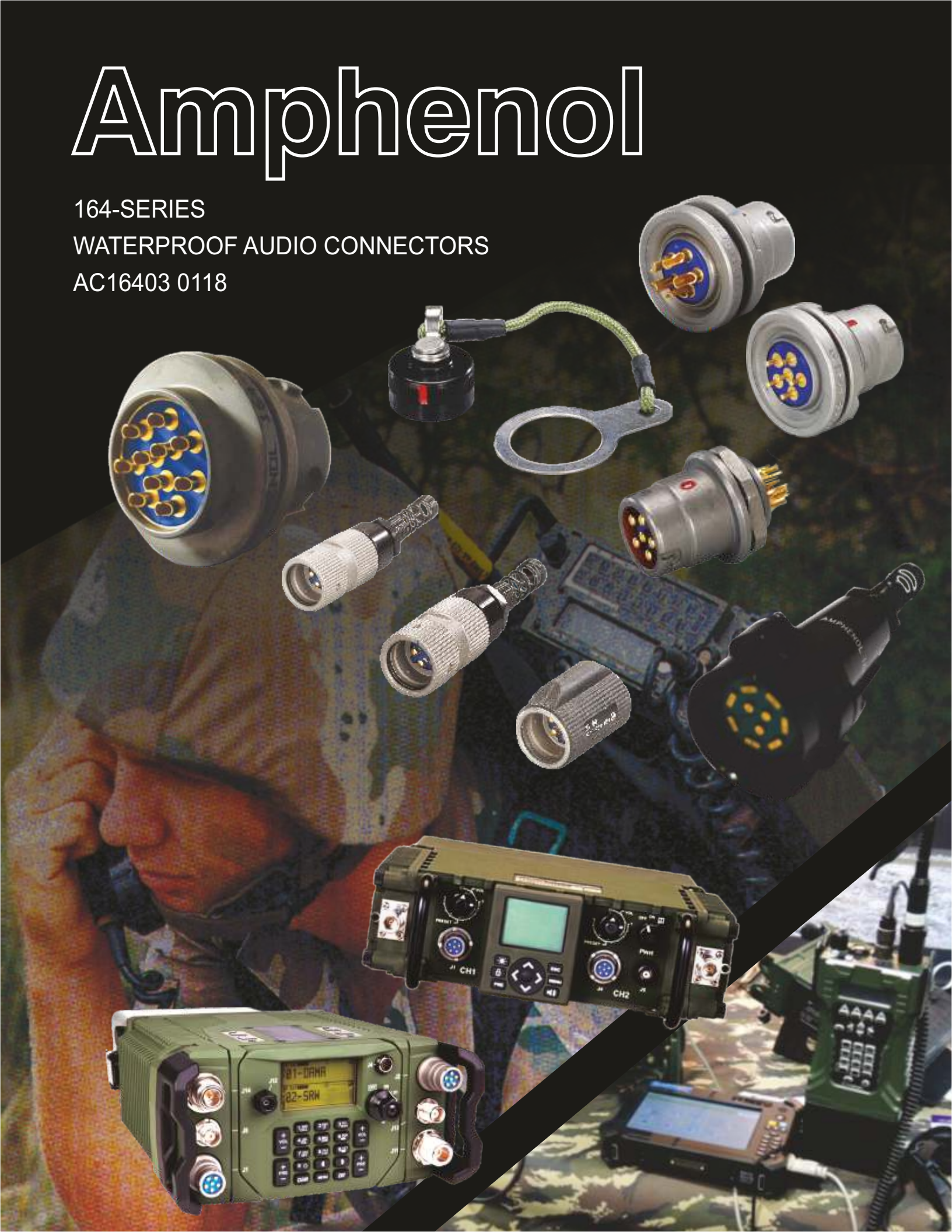

Introduction

Amphenol 164 series connectors are water resistant, five & six pin contact electrical connectors for use in low voltage audio frequency circuits & applications. They employ three-point bayonet coupling for quick disconnect & self wipe contact.

These connectors are extensively used in military communication equipments, where high reliability is paramount & severe environmental conditions are encountered.

Amphenol 164 series connectors are qualified to MIL specification MIL-DTL-55116. They are intermatable with any other manufacturers product which is designed as per MIL-DTL-55116.

	Page
Introduction	1
Specifications, Material & Finishes	2
QPL Approval Letter	3-4
Five & Six Pin Audio Plug Connector Crimp Sleeve Terminal (U-229-Type) Products	5
Five & Six Pin Audio Plug Connector Solder Cup Terminal (U-229S-Type) Products	6
Five & Six Pin Audio Plug Connector Crimp Sleeve Terminal (U-182-Type) Products	7
Five & Six Pin Audio Plug Connector Solder Cup Terminal (U-182S-Type) Products	8
Five & Six Pin Audio Receptacle Panel Mount Connector-Solder (U-183/U Type & U-283/U Type) Products	9
Five & Six Pin Audio Receptacle Connector Crimp Sleeve Terminal (U-228/U Type & U-328/U Type) Products	10
Five & Six Pin Audio Receptacle Connector Solder Cup Terminal (U-228/U Type & U-328/U Solder Type) Products	11
List Of Part Numbers	12
Ordering Information	13
Special Products	15-27

Specifications

Electrical

Operating Current	500 m A per contact
Operating Voltage	60V max.
Contact Resistance	0.050 ohms max.
Insulation Resistance	1000 M ohm @ 100 V DC
Dielectric Strength	500V rms

Mechanical

Number of Contacts	5 or 6
Air Pressure	2.5 PSI
Durability	3000 cycles, mate & unmate.
Immersion	48 hrs. At 6ft.

Environmental

Operating Temperature	-55^{0} C to $+85^{0}$ C.

Material & Finishes

Part	Material	Finish
Shell & Nut	Stainless Steel	Sand Blasted
Insulator	Diallyphthalate as per ASTM D5948 Type SDG-F	-
Contact	Copper Alloy -Brass	0.75µm Gold over Nickel

Defence Logistics Agency
Defence Supply Centre, Columbus
Post Office Box 3990
Columbus, OH 43218-3990

MAR 18 2009

DSCC-VQP-09-017606 (Mr. Funk/614-692-6608/jf)
Subject: Qualification for MIL-DTL-55116
DSCC Test Report Number 55116-2285-08
FSC 5935, Preparing Activity:DLA-CC

Amphenol Interconnect India Pvt. Ltd.
105, Bhosari Industrial Estate
Pune-411026 (India)

We have received Amphenol Interconnect India's test report and supporting data dated February 18, 2009. Qualification of your products is granted under the Military Specification Sheets listed below as a result of providing exhibit samples that demonstrate your capability to manufacture these products to Military Specification MIL-DTL-55116.

Supplier: Amphenol Interconnect India Pvt. Ltd.	Supplier: Amphenol Interconnect India Pvt. Ltd.
Government Designation: M55116/1-( )	Government Designation: M55116/2-( )
Manufacturer's Designation: 164-229-( )	Manufacturer's Designation: 164-229-6-( )
Cable Accommodation: 1, 2, 3, 4, 5	Cable Accommodation: 1, 2, 3, 4, 5
Test or Qualification Reference: 55116-2285-08	Test or Qualification Reference: 55116-2285-08
Supplier: Amphenol Interconnect India Pvt. Ltd.	Supplier: Amphenol Interconnect India Pvt. Ltd.
Government Designation: M55116/3-( )	Government Designation: M55116/4-( )
Manufacturer's Designation: 164-229-S-( )	Manufacturer's Designation: 164-229-6S-( )
Cable Accommodation: 1, 2, 3, 4, 5	Cable Accommodation: 1, 2, 3, 4, 5
Test or Qualification Reference: 55116-2285-08	Test or Qualification Reference: 55116-2285-08
Supplier: Amphenol Interconnect India Pvt. Ltd.	Supplier: Amphenol Interconnect India Pvt. Ltd.
Government Designation: M55116/5-( )	Government Designation: M55116/6-( )
Manufacturer's Designation: 164-182-( )	Manufacturer's Designation: 164-182-6-( )
Cable Accommodation: 1, 2, 3, 4, 5	Cable Accommodation: 1, 2, 3, 4, 5
Test or Qualification Reference: 55116-2285-08	Test or Qualification Reference: 55116-2285-08
Supplier: Amphenol Interconnect India Pvt. Ltd.	Supplier: Amphenol Interconnect India Pvt. Ltd.
Government Designation: M55116/7-( )	Government Designation: M55116/8-( )
Manufacturer's Designation: 164-182-S( )	Manufacturer's Designation: 164-182-6S-( )
Cable Accommodation: 1, 2, 3, 4, 5	Cable Accommodation: 1, 2, 3, 4, 5
Test or Qualification Reference: 55116-2285-08	Test or Qualification Reference: 55116-2285-08

Supplier: Amphenol Interconnect India Pvt. Ltd.	Supplier: Amphenol Interconnect India Pvt. Ltd.
Government Designation: M55116/9-( )	Government Designation: M55116/10-( )
Manufacturer's Designation: 164-183-( )	Manufacturer's Designation: 164-183-6-( )
Cable Accommodation: 0	Cable Accommodation: 0
Test or Qualification Reference: 55116-2285-08	Test or Qualification Reference: 55116-2285-08
Supplier: Amphenol Interconnect India Pvt. Ltd.	Supplier: Amphenol Interconnect India Pvt. Ltd.
Government Designation: M55116/11-( )	Government Designation: M55116/12-( )
Manufacturer's Designation: 164-228-( )	Manufacturer's Designation: 164-228-6-( )
Cable Accommodation: 1, 2, 3, 4, 5	Cable Accommodation: 1, 2, 3, 4, 5
Test or Qualification Reference: 55116-2285-08	Test or Qualification Reference: 55116-2285-08
Supplier: Amphenol Interconnect India Pvt. Ltd.	Supplier: Amphenol Interconnect India Pvt. Ltd.
Government Designation: M55116/13-( )	Government Designation: M55116/14-( )
Manufacturer's Designation: 164-228-S-( )	Manufacturer's Designation: 164-228-6S-( )
Cable Accommodation: 1, 2, 3, 4, 5	Cable Accommodation: 1, 2, 3, 4, 5
Test or Qualification Reference: 55116-2285-08	Test or Qualification Reference: 55116-2285-08

A detailed listing of the connector type under the Military Specification Sheet will be listed on the Qualified Products List (QPL) 55116. This qualification is subject to the conditions stated in DoD 4120.24-M and SD-6.

Because we are held responsible for the accuracy and currency of this QPL, please let us know if your company discontinues production of these products.

If you have any questions concerning this letter, please contact Mr. Funk at 614-692-6608 or email Jeremy.Funk@dla.mil.

Sincerely,

JOSEPH GEMPERLINE
Chief
Sourcing and Qualifications Division

Five & Six Pin Audio Plug Connector Crimp Sleeve Terminal

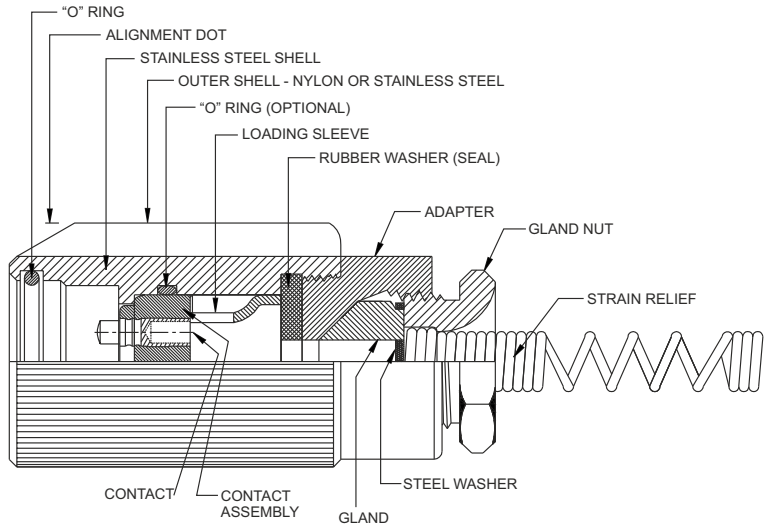

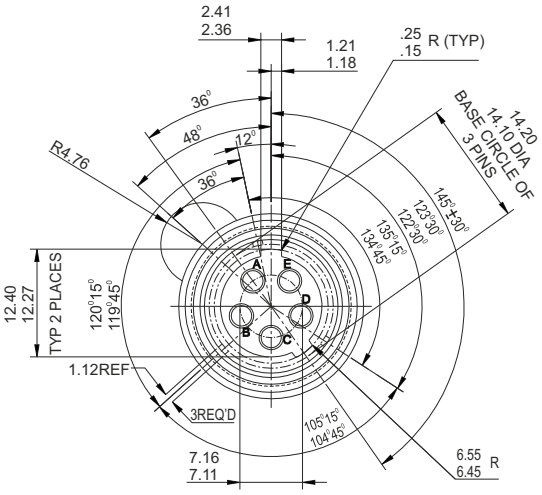

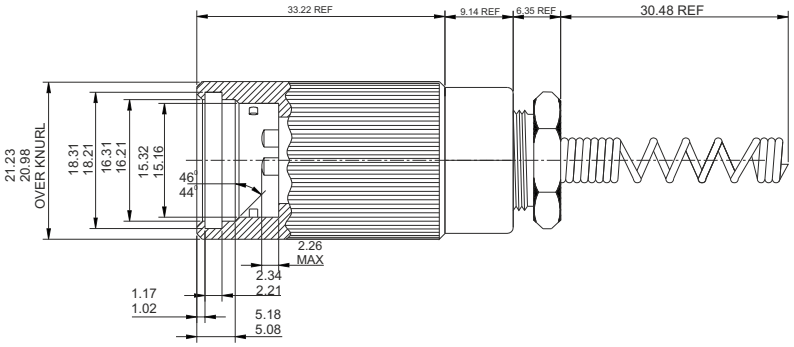

M55116/1-X

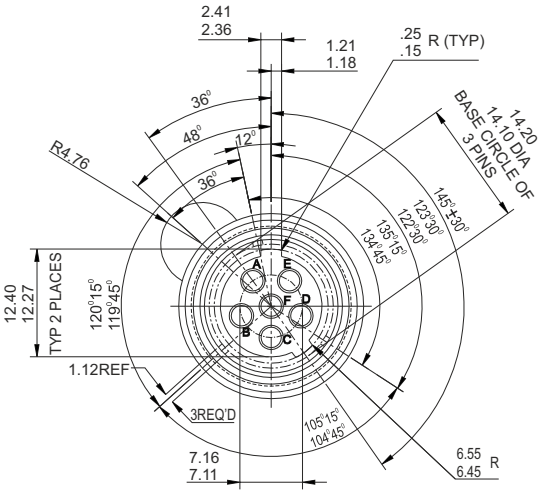

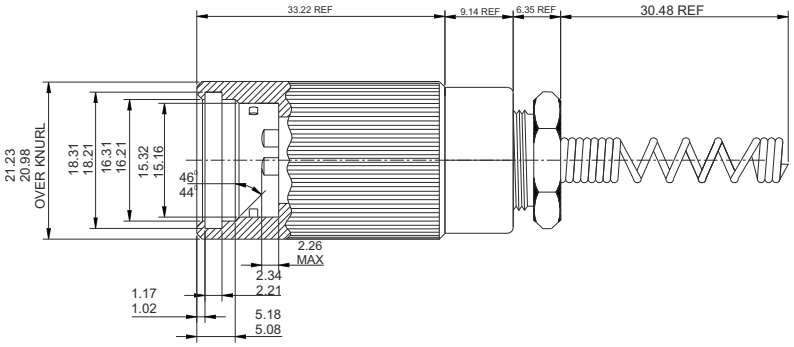

M55116/2-X

Sr No.	Description	MIL Designation	Amphenol Designation
1	5 Pin Audio plug connector with crimp sleeve terminal & wire strain relief	M55116/1-X	164-229-X
2	6 Pin Audio plug connector with crimp sleeve terminal & wire strain relief	M55116/2-X	164-229-6-X

Dash no-X	Cable diameter
-0	N/A
-1	4.19 ± 0.25
-2	5.79 ± 0.25
-3	6.35 ±0.25
-4	7.36 ± 0.25
-5	8.12 ± 0.25

X Stands for the Cable size accommodation, is identified by a dash number as shown in above table. This number indicates the outside diameter of the cable that the connector will accommodate.

Five & Six Pin Audio Plug Connector Solder Cup Terminal

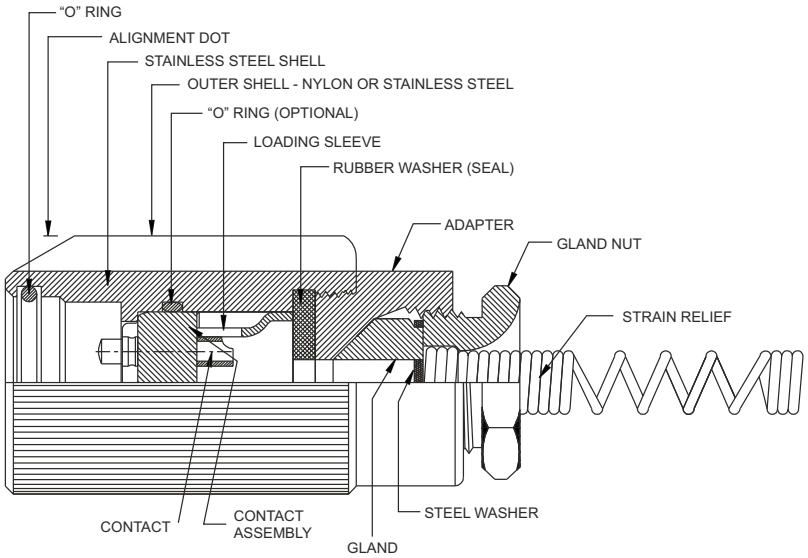

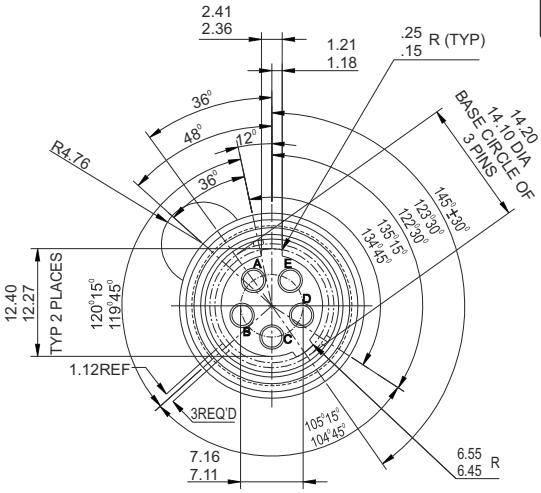

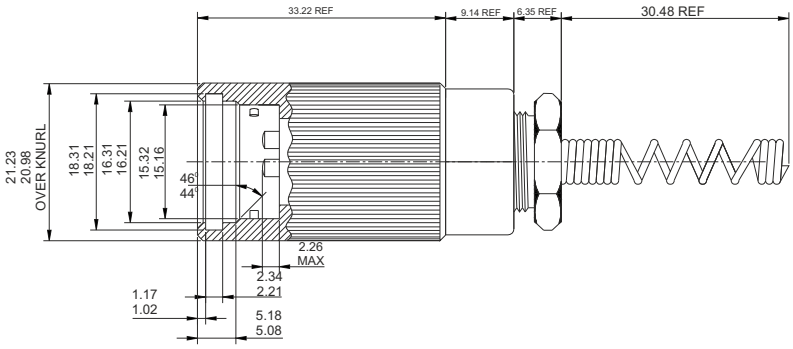

M55116/3-X

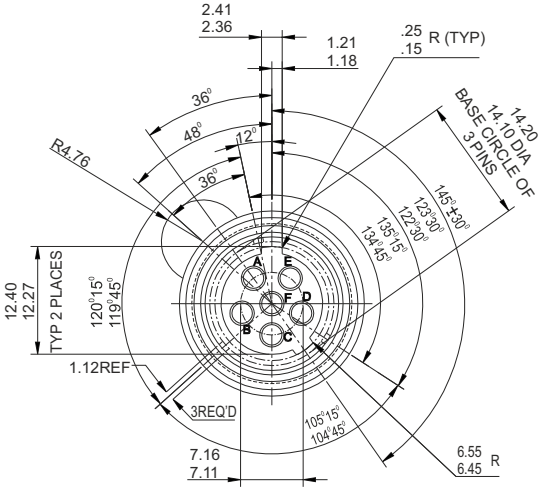

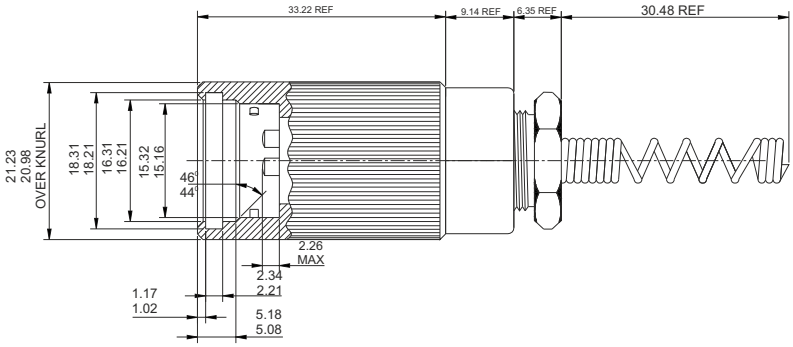

M55116/4-X

Sr No.	Description	MIL Designation	Amphenol Designation
1	5 Pin Audio plug connector with Solder Cup Terminal & wire strain relief	M55116/3-X	164-229-S-X
2	6 Pin Audio plug connector with Solder Cup Terminal & wire strain relief	M55116/4-X	164-229-6S-X

Dash no-X	Cable diameter
-0	N/A
-1	4.19 ± 0.25
-2	5.79 ± 0.25
-3	6.35 ±0.25
-4	7.36 ± 0.25
-5	8.12 ± 0.25

X Stands for the Cable size accommodation, is identified by a dash number as shown in above table. This number indicates the outside diameter of the cable that the connector will accommodate.

Five & Six Pin Audio Plug Connector Crimp Sleeve Terminal

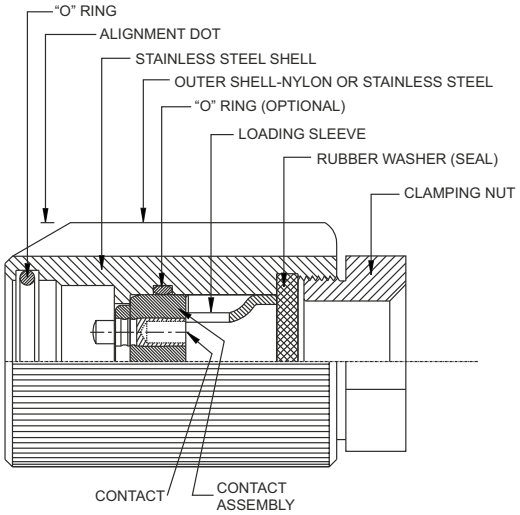

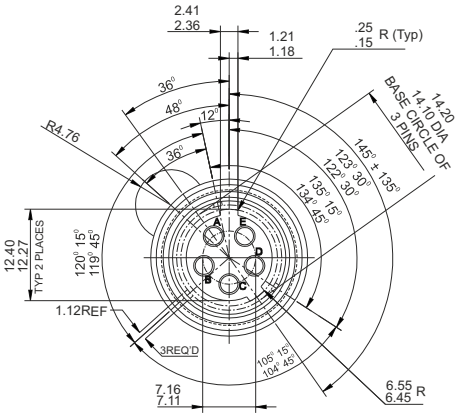

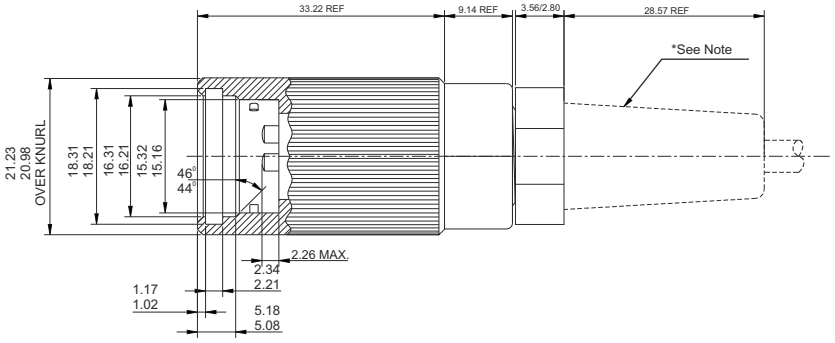

M55116/5-X

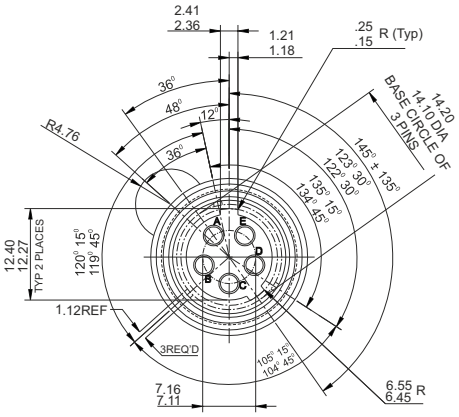

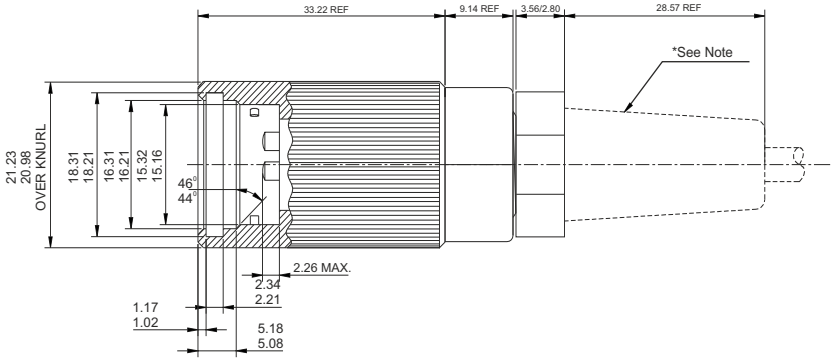

M55116/6-X

Sr No.	Description	MIL Designation	Amphenol Designation
1	5 Pin Audio plug connector with crimp sleeve terminal & molded strain relief (Not supplied)	M55116/5-X	164-182-X
2	6 Pin Audio plug connector with crimp sleeve terminal & molded strain relief (Not supplied)	M55116/6-X	164-182-6-X

Dash no-X	Cable diameter
-0	N/A
-1	4.19 ± 0.25
-2	5.79 ± 0.25
-3	6.35 ±0.25
-4	7.36 ± 0.25
-5	8.12 ± 0.25

X Stands for the Cable size accommodation, is identified by a dash number as shown in above table. This number indicates the outside diameter of the cable that the connector will accommodate.

*Nylon molded strain relief on request

Five & Six Pin Audio Plug Connector Solder Cup Terminal

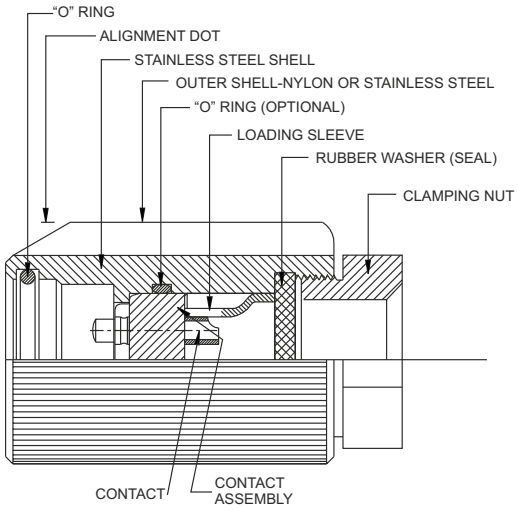

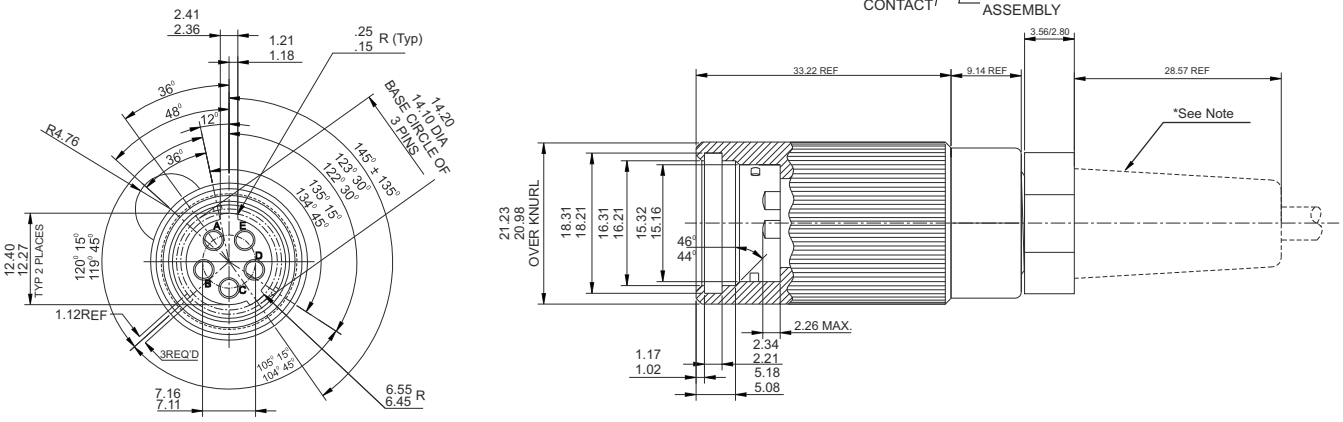

M55116/7-X

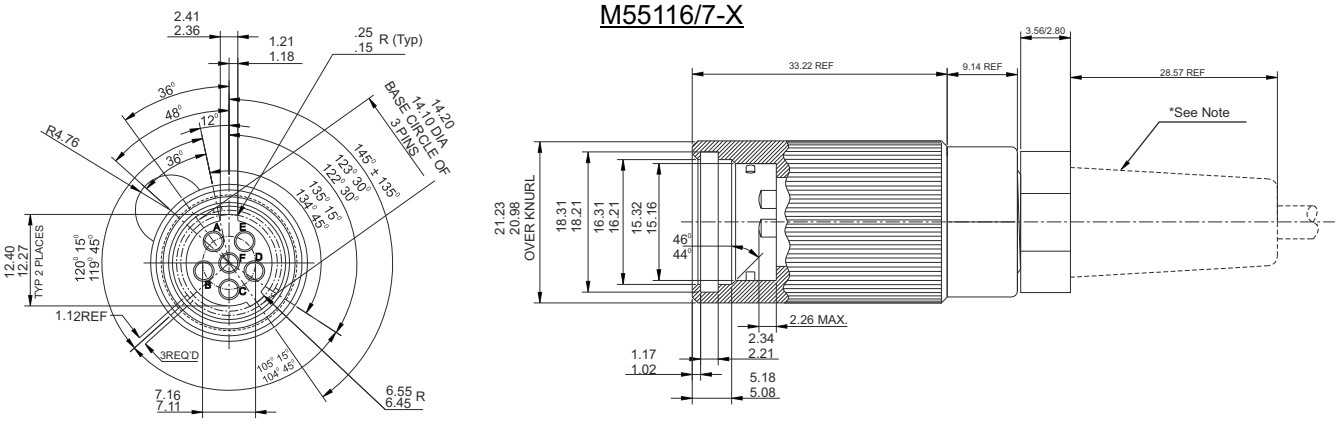

M55116/8-X

Sr No.	Description	MIL Designation	Amphenol Designation
1	5 Pin Audio plug connector with Solder Cup Terminal & molded strain relief (Not Supplied)	M55116/7-X	164-182-S-X
2	6 Pin Audio plug connector with Solder Cup Terminal & molded strain relief (Not Supplied))	M55116/8-X	164-182-6S-X

Dash no-X	Cable diameter
-0	N/A
-1	4.19 ± 0.25
-2	5.79 ± 0.25
-3	6.35 ±0.25
-4	7.36 ± 0.25
-5	8.12 ± 0.25

X Stands for the Cable size accommodation, is identified by a dash number as shown in above table. This number indicates the outside diameter of the cable that the connector will accommodate.

*Nylon molded strain relief on request

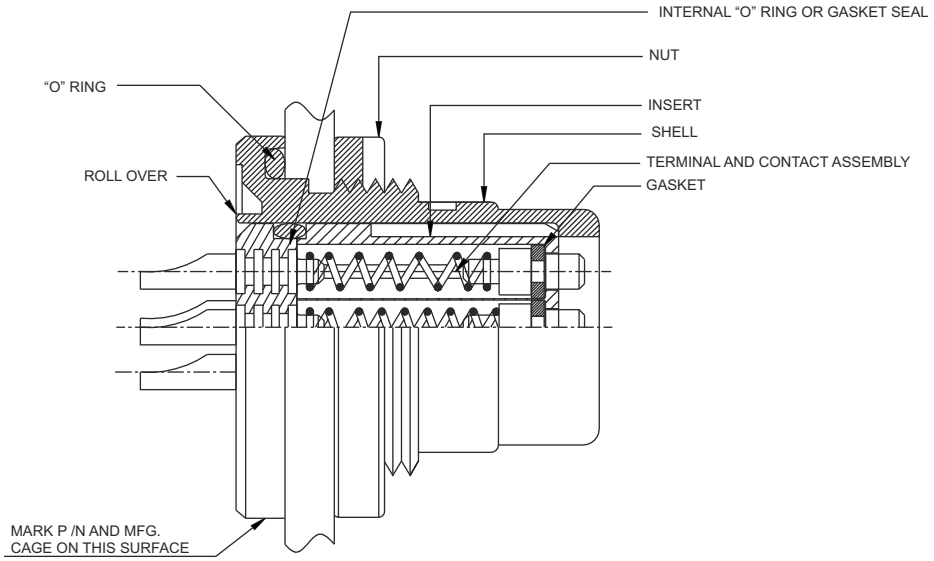

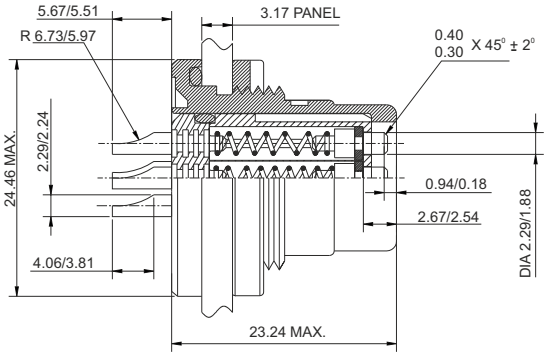

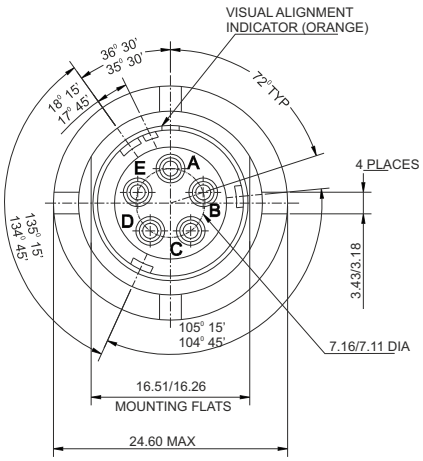

M55116/9

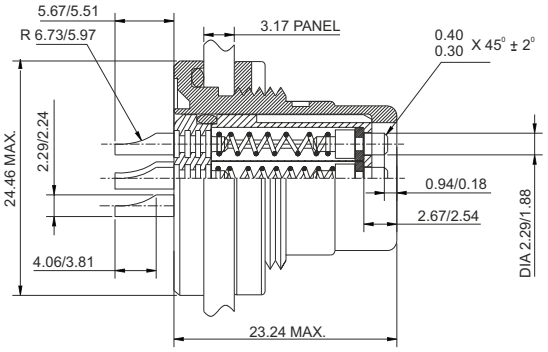

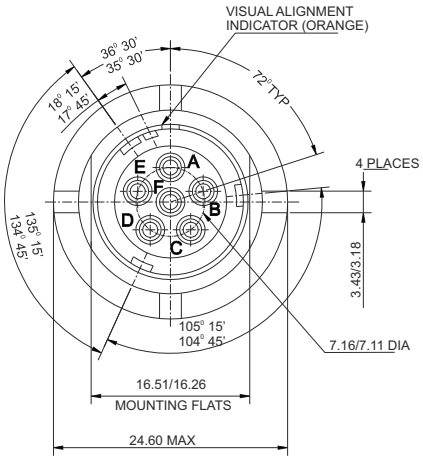

M55116/10

Sr No.	Description	MIL Designation	Amphenol Designation
1	5 Pin Audio Receptacle with solder cup terminal, Panel Mount	M55116/9	164-183
2	6 Pin Audio Receptacle with solder cup terminal, Panel Mount	M55116/10	164-183-6

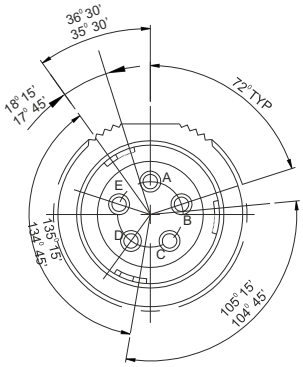

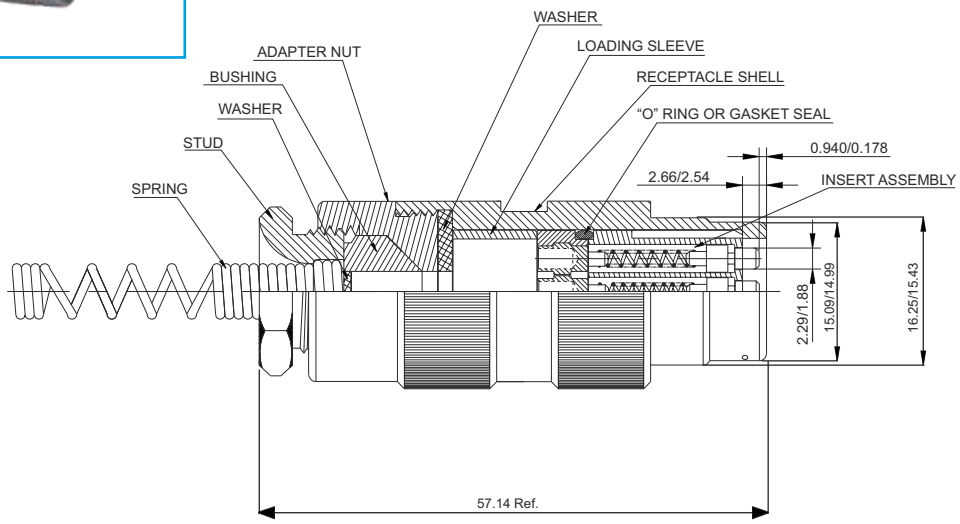

M55116/11-X

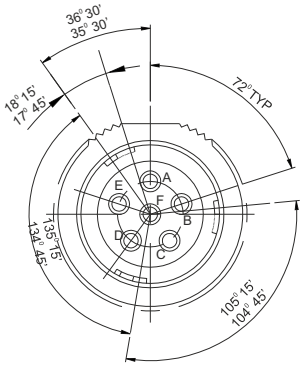

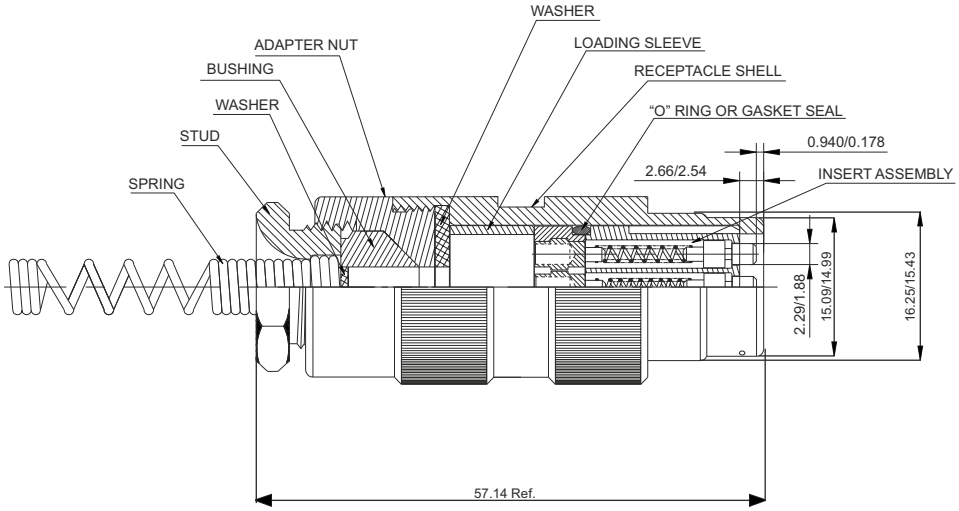

M55116/12-X

Sr No.	Description	MIL Designation	Amphenol Designation
1	5 Pin Audio Receptacle with Crimp sleeve terminal & wire strain relief	M55116/11-X	164-228-X
2	6 Pin Audio Receptacle with Crimp sleeve terminal & wire strain relief	M55116/12-X	164-228-6-X

Dash no-X	Cable diameter
-0	N/A
-1	4.19 ± 0.25
-2	5.79 ± 0.25
-3	6.35 ±0.25
-4	7.36 ± 0.25
-5	8.12 ± 0.25

X Stands for the Cable size accommodation, is identified by a dash number as shown in above table. This number indicates the outside diameter of the cable that the connector will accommodate.

Five & Six Pin Audio Receptacle Connector Solder Cup Terminal

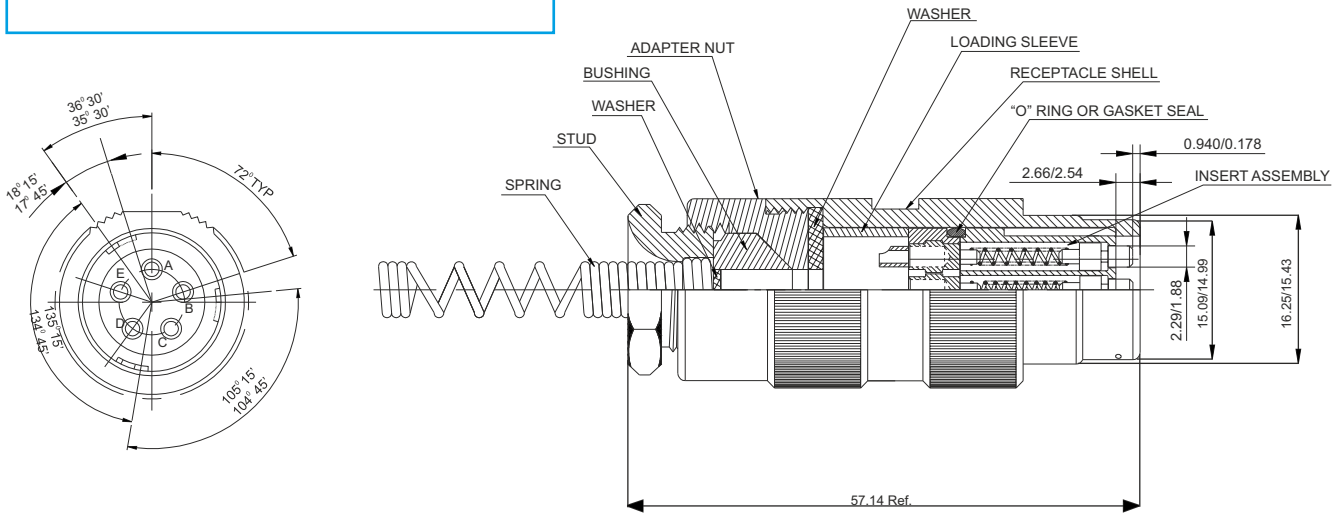

M55116/13-X

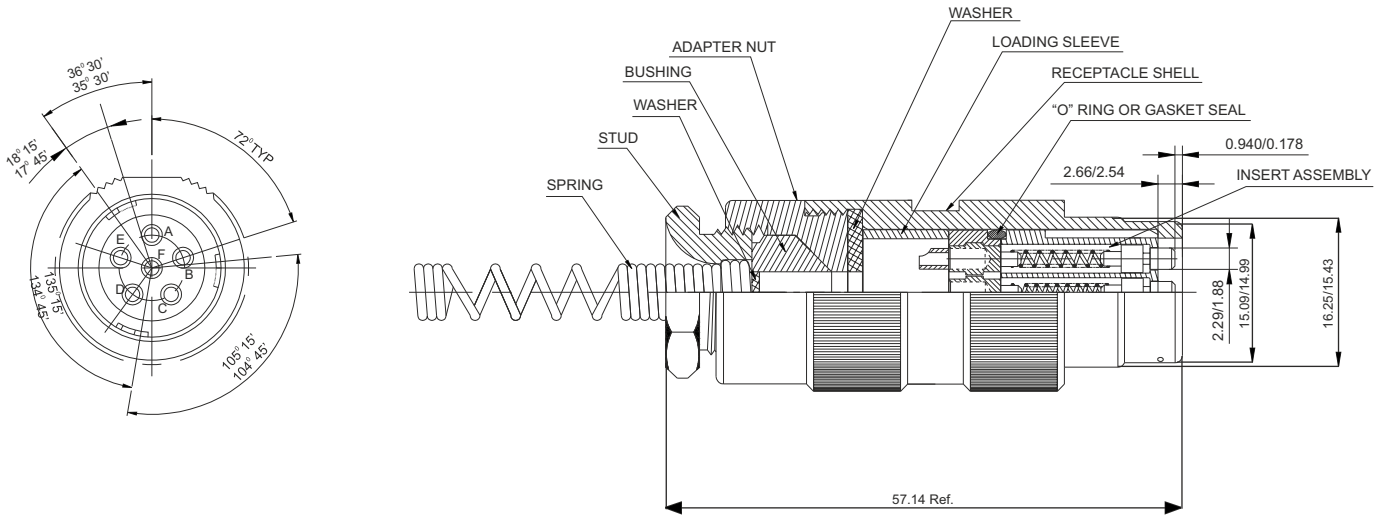

M55116/14-X

Sr No.	Description	MIL Designation	Amphenol Designation
1	5 Pin Audio Receptacle with solder cup terminal & wire strain relief	M55116/13-X	164-228-S-X
2	6 Pin Audio Receptacle with solder cup terminal & wire strain relief	M55116/14-X	164-228-6S-X

Dash no-X	Cable diameter
-0	N/A
-1	4.19 ± 0.25
-2	5.79 ± 0.25
-3	6.35 ±0.25
-4	7.36 ± 0.25
-5	8.12 ± 0.25

X Stands for the Cable size accommodation, is identified by a dash number as shown in above table. This number indicates the outside diameter of the cable that the connector will accommodate.

Sr. No.	MIL Specification Designation	Amphenol Designation
1	M55116/1-1	164-229-1
2	M55116/1-2	164-229-2
3	M55116/1-3	164-229-3
4	M55116/1-4	164-229-4
5	M55116/1-5	164-229-5
6	M55116/2-1	164-229-6-1
7	M55116/2-2	164-229-6-2
8	M55116/2-3	164-229-6-3
9	M55116/2-4	164-229-6-4
10	M55116/2-5	164-229-6-5
11	M55116/3-1	164-229-S-1
12	M55116/3-2	164-229-S-2
13	M55116/3-3	164-229-S-3
14	M55116/3-4	164-229-S-4
15	M55116/3-5	164-229-S-5
16	M55116/4-1	164-229-6S-1
17	M55116/4-2	164-229-6S-2
18	M55116/4-3	164-229-6S-3
19	M55116/4-4	164-229-6S-4
20	M55116/4-5	164-229-6S-5
21	M55116/5-1	164-182-1
22	M55116/5-2	164-182-2
23	M55116/5-3	164-182-3
24	M55116/5-4	164-182-4
25	M55116/5-5	164-182-5
26	M55116/6-1	164-182-6-1
27	M55116/6-2	164-182-6-2
28	M55116/6-3	164-182-6-3
29	M55116/6-4	164-182-6-4
30	M55116/6-5	164-182-6-5
31	M55116/7-1	164-182-S-1
32	M55116/7-2	164-182-S-2
33	M55116/7-3	164-182-S-3
34	M55116/7-4	164-182-S-4
35	M55116/7-5	164-182-S-5
36	M55116/8-1	164-182-6S-1
37	M55116/8-2	164-182-6S-2
38	M55116/8-3	164-182-6S-3
39	M55116/8-4	164-182-6S-4
40	M55116/8-5	164-182-6S-5
41	M55116/9	164-183
42	M55116/10	164-183-6
43	M55116/11-1	164-228-1
44	M55116/11-2	164-228-2
45	M55116/11-3	164-228-3
46	M55116/11-4	164-228-4
47	M55116/11-5	164-228-5
48	M55116/12-1	164-228-6-1
49	M55116/12-2	164-228-6-2
50	M55116/12-3	164-228-6-3
51	M55116/12-4	164-228-6-4
52	M55116/12-5	164-228-6-5
53	M55116/13-1	164-228-S-1
54	M55116/13-2	164-228-S-2
55	M55116/13-3	164-228-S-3
56	M55116/13-4	164-228-S-4
57	M55116/13-5	164-228-S-5
58	M55116/14-1	164-228-6S-1
59	M55116/14-2	164-228-6S-2
60	M55116/14-3	164-228-6S-3
61	M55116/14-4	164-228-6S-4
62	M55116/14-5	164-228-6S-5

M55116/ XX- X

MIL Specification number

Style
(1 thru 14)

Cable Size designator (0 thru 5)
as shown in below table

Dash no-X	Cable diameter
-0	N/A
-1	4.19 ± 0.25
-2	5.79 ± 0.25
-3	6.35 ±0.25
-4	7.36 ± 0.25
-5	8.12 ± 0.25

Note : Standard plug connector supplied with nylon over molding. For Stainless Steel version please add prefix S01 at the end of part number ordering information.

Special Products

Receptacles With PC Tail Contacts

Barrel Rigid Contact
(Crimp Sleeve Terminal)

Solder Rigid Contact
(Solder Cup Terminal)

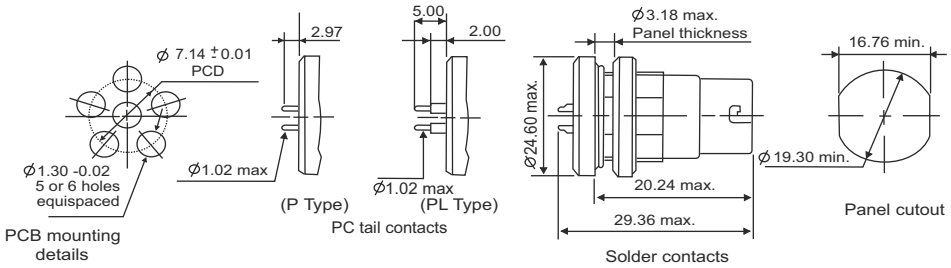

All dimensions in mm

Part Number	No. of Contacts	Contact Type	Mates With
164-183-P	5	PC tail spring loaded	164-229, 164-229-S, 164-182
164-183-PL	5	PC tail spring loaded	164-182-S,164-182-L, 164-182-LS
164-183-6P	6	PC tail spring loaded	164-229-6, 164-229-6S, 164-182-6
164-183-6PL	6	PC tail spring loaded	164-182-6S, 164-182-6L

Rear Mount Receptacles 6 Pins

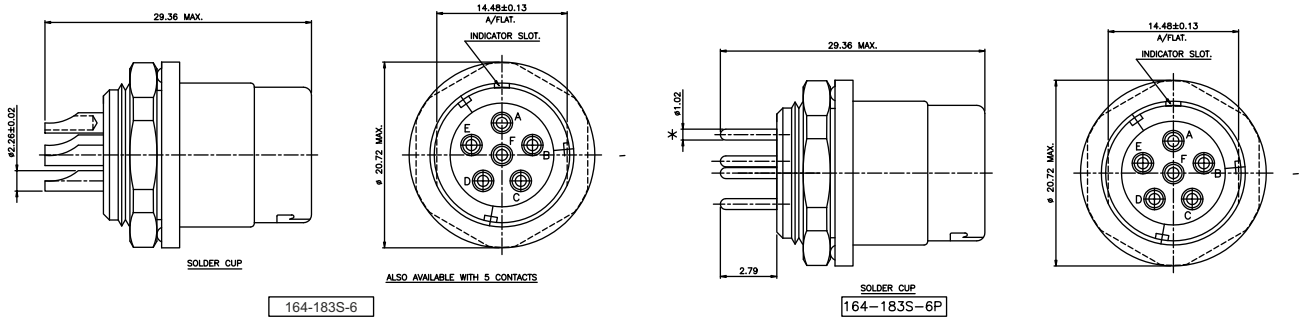

Note: For 5 Pin Connector Contact Factory

Plug Connector Without Nylon Overmoulded

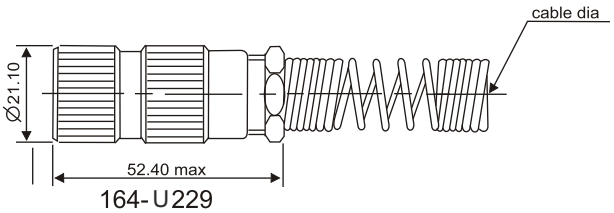

164-U229

Part Number	No of contact	Contact Type
164-U229-X	5	Barrel Rigid
164-U229-S-X	5	Solder Rigid
164-U229-6-X	6	Barrel Rigid
164-U229-6S-X	6	Solder Rigid

Dash no-X	Cable diameter
-0	N/A
-1	4.19 ± 0.25
-2	5.79 ± 0.25
-3	6.35 ±0.25
-4	7.36 ± 0.25
-5	8.12 ± 0.25

164 Receptacle Connector With PC Tail Contact

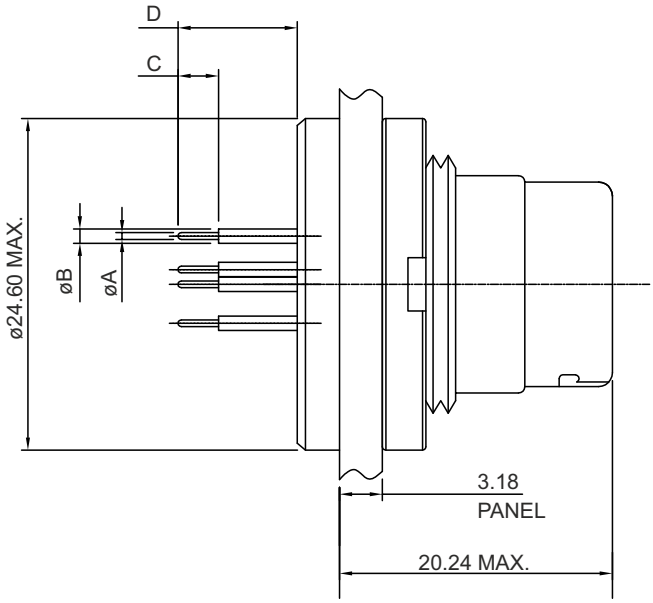

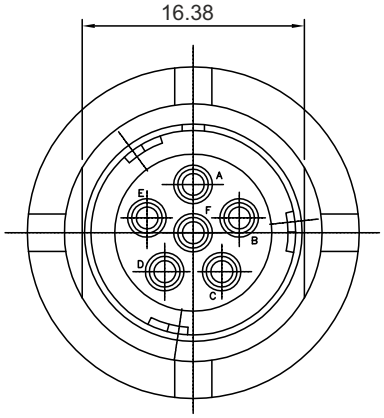

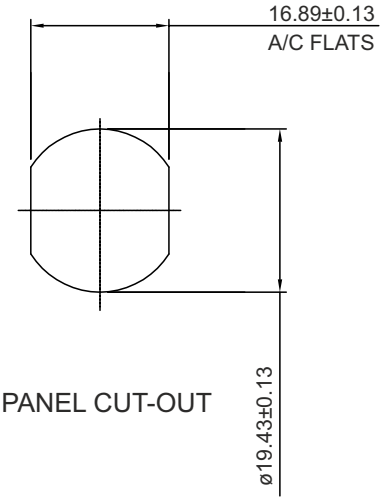

PANEL CUT-OUT

164-183-5PL-XX (FOR 5 PIN)

MODIFIER	øA	øB	C±0.50	D±0.50
NO MODIFIER	1.02	1.78	3.00	5.00
–1	1.02	2.26	2.92	4.29
–5	0.71	2.26	3.18	4.93
–8	0.71	2.26	4.78	14.99
–9	1.02	1.02	11.10	11.10
–10	0.71	2.26	5.54	6.53
–12	1.02	1.02	2.79	2.79
–13	0.71	2.26	3.81	11.10
–14	0.76	0.76	3.05	3.05
–15	0.71	2.26	3.56	9.91
–16	1.02	1.02	18.90	18.90
–20	0.76	0.76	14.33	14.33
–21	1.02	1.02	2.79	2.79
–22	0.65	2.25	3.10	5.00
–23	1.02	1.78	2.00	5.00

164-183-6PL-XX (FOR 6 PIN)

MODIFIER	øA	øB	C±0.50	D±0.50
NO MODIFIER	1.02	1.78	3.00	5.00
–1	1.02	2.26	2.92	4.29
–2	1.02	1.02	11.10	10.10
–8	0.71	2.26	4.78	14.99
–9	0.71	2.26	3.18	4.93
–10	0.71	2.26	5.54	6.53
–12	1.02	1.02	2.79	2.79
–13	0.71	2.26	3.81	11.10
–14	0.76	0.76	3.05	3.05
–15	0.71	2.26	3.56	9.91
–16	1.02	1.02	18.90	18.90
–20	0.76	0.76	14.33	14.33
–21	1.02	1.02	2.79	2.79
–22	0.65	2.25	3.10	5.00
–23	1.02	1.78	2.00	5.00

Note: Consult Factory For Other Pcb Termination Styles And Availability

Filtered Audio Receptacle Connector

Connector Meets All Requirement Of MIL-C-55116/5081

Filter Specifications:

Capacitance (1KHz, 25^0)	:8000PF TYP
Insertion Loss (TYP.) (MIL-STD-220, No Load 25^0)	:1Mhz - 4dB :10Mhz - 25dB :50Mhz - 60dB
Working Voltage	:100DVC
Dielectric Voltage Breakdown	:300VDC
Insulation Resistance (100VDC, 25^0 C)	:10000 Mohms Min.
RF Current	:0.25 A Max.

Method Of Designation

Connector Number	Description	No. Of Contacts	Contact Termination
164F-1836B-527	164 Filtered Audio Receptacle Connector	6	PC Tail
164F-1835B-527	164 Filtered Audio Receptacle Connector	5	PC Tail

164F-1836B -527 Filtered Audio Receptacle Connector

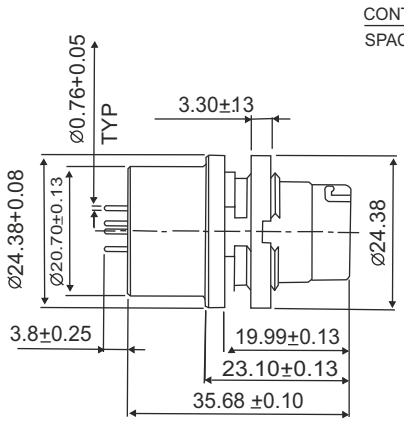

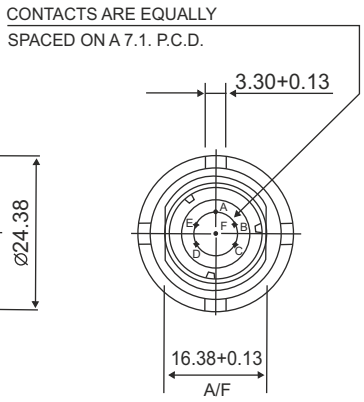

SCHEMATIC DIAGRAM OF 'Pi' FILTER

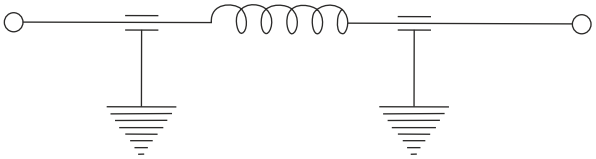

PANEL CUTOUT

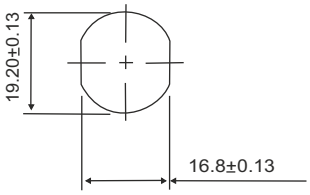

164F - 1836B -527 Filtered Audio Receptacle Connector

Specifications (Technical Data):

Materials

Shell and Panel Nut	: Stainless Steel
Contacts	: Copper Alloy
Insulator	: Diallyl Pthalate Per MIL-M-14 Type MDG/Polyethersulfone

Finish Colour

Shell and Panel Nut	:Sand blasted and Passivated
Contacts	:0.75µThick Gold Plate Over Nickel Undercoat 2.54µ
Insulator	:Blue/Black

Electrical Properties

Operating Voltage	:60V Max. Potential
Current Rating	:0.5A Max.
Dielectric Breakdown	:300V DC
Insulation Resistance	:1000M Ohms
Contact Resistance(Mated)	:0.050 Ohms Max.

Mechanical Properties

Air Pressure	:2.5 P.S.I.
Water Immersion	:48 Hrs. At 6 Feet
Durability	:3000 Cycles Mate & Unmate

Operating Temperature Range: -55 ^{0}C TO 85 ^{0}C

Amphenol 164 F-1836B-527 Receptacle Mates With:

Amphenol 164-229-6 &164-229
Amphenol 164-229-6S &164-229-S

Tightening Spanner (164-T001)
(Panel Nut Tightening For 164-183 Connector)

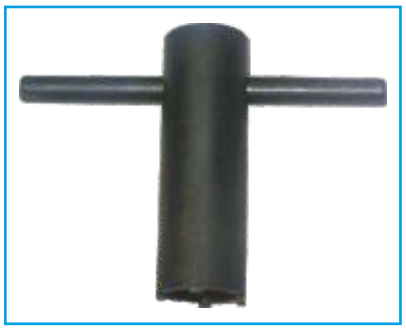

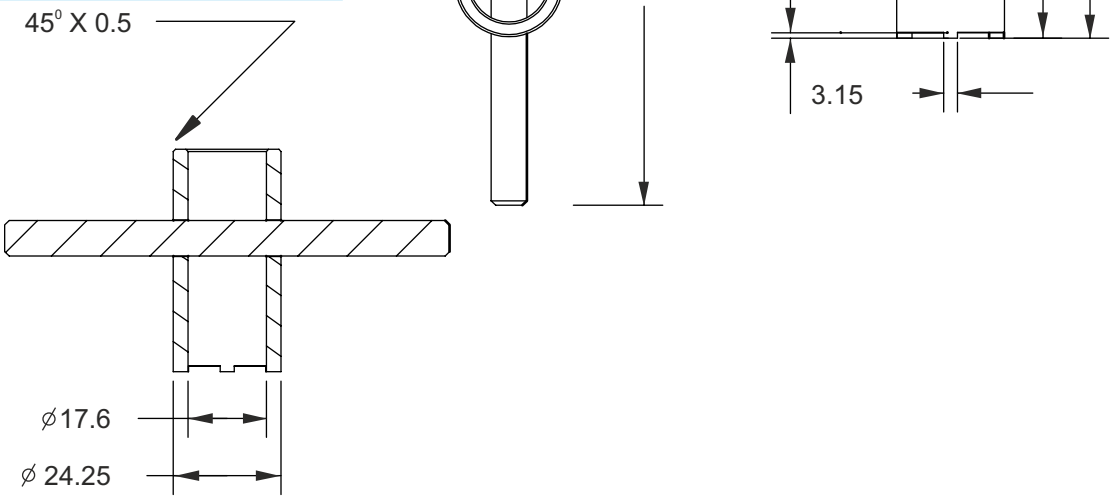

Tightening Spanner (164-T002)
(Panel Nut Tightening For 164-183 Connector - Torque Wrench Provision)

Ordering Part No. - 164- T002

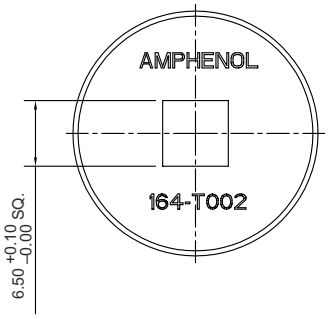

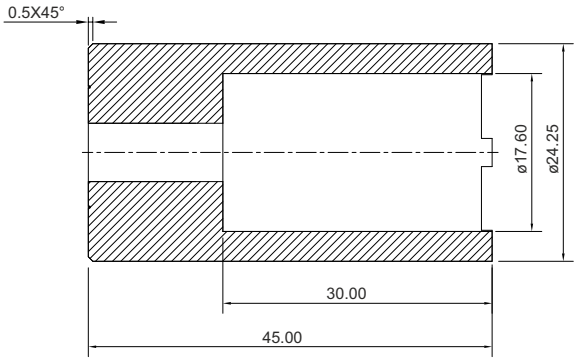

Accessories - Caps For 5 & 6 Pin Connectors

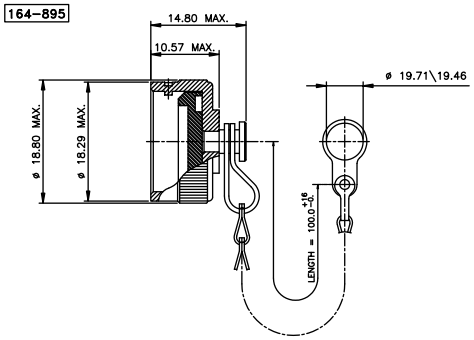

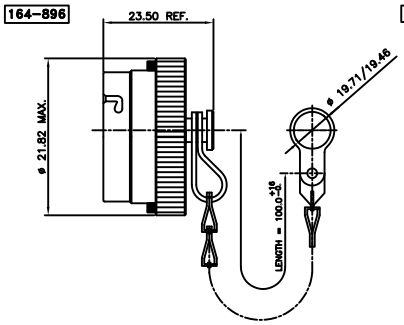

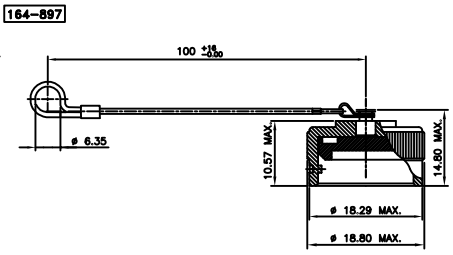

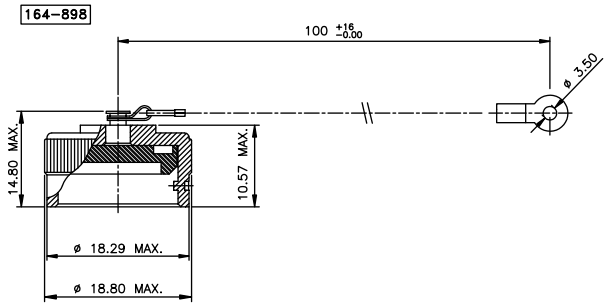

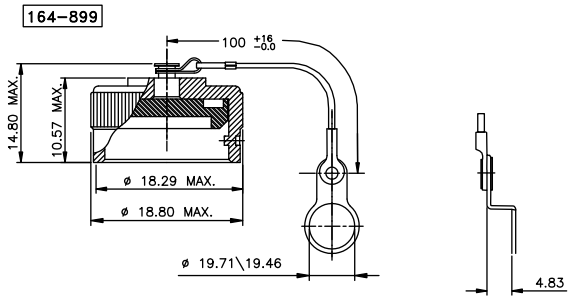

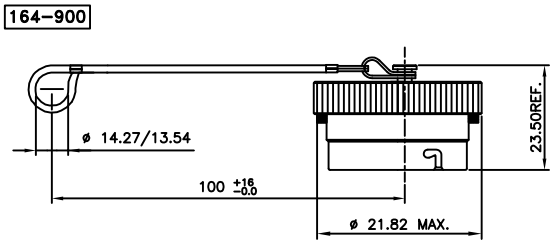

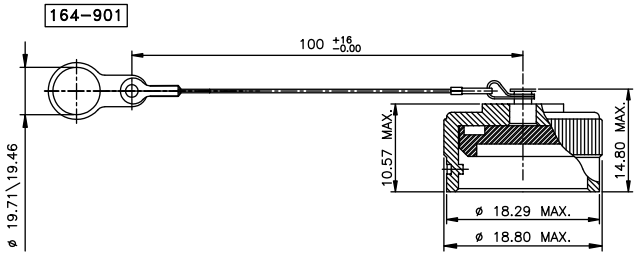

ORDERING INFORMATION FOR 164 DUST CAP

164 895 CD LXX

Series Designation
164. MIL 55116 Audio Connector Caps
Shell Style

895:-Receptacle dust caps for 5 & 6 pin audio connector with chain & solid ring

896:-Plug dust caps for 5 & 6 pin audio connector with chain & solid ring

897:-Receptacle dust caps for 5 & 6 pin audio connector with nylon rope & loop

898:-Receptacle dust caps for 5 & 6 pin audio connector with nylon rope & SS lug

899:-Receptacle dust caps for 5 & 6 pin audio connector with SS rope & lug

900:-Plug caps for 5 & 6 pin audio connector with SS rope & loop

901:-Receptacle dust caps for 5 & 6 pin audio connector with nylon rope & solid ring

Special Deviation for length for standard none for Non std. mention length in mm

Finish
Standard Black anodic caps
CD - Cadmium olive green finish
622 - Zn Co olive green finish
624 - Zn Co black finish

MATERIAL

Cover	: Machined Alluminium Alloy
Gasket	: Silicon elastomer
Chain	: Stainless steel passivated
Ring	: Stainless steel passivated
SS Rope	: Stainless steel teflon coated
Rope	: Nylon (olive green)
Fastners	: Stainless steel passivated

Dust Cap for 10 Pin Receptacle

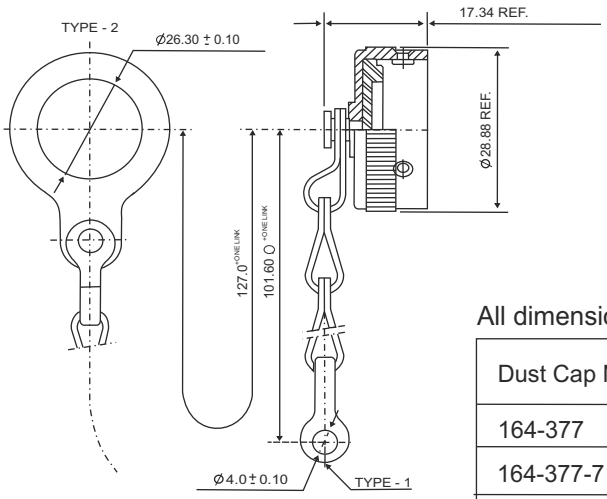

All dimensions in mm

Table 1

Dust Cap No.	Link Type	Cap Finish
164-377	Type -2	Black Anodised
164-377-714	Type-2	Cadmium Plate with Electroless Under Coat
164-377-01	Type-1	Black Anodised
164-377-01-714	Type-1	Cadmium Plate with Electroless Under Coat

Specifications:

1. Materials & Finish

Receptacle Shell	: Stainless Steel, passivated, sand blasted
Plug Shell	: Stainless Steel, black passivated
Rear Shell	: Aluminium alloy, black oxide : Zinc Black for shielded
Inserts	: Diallylphthalate as per MIL–M–14F, type MDG
Contacts	: Copper Alloy, Gold plated .000030 In
Panel Nuts	: Stainless Steel, passivated sand blasted

2. Mechanical Properties

Durability	: 3000 Cycles Min.
Air Pressure	: 2.5psi.
Immersion	: 48 Hrs at 6 ft.

3. Electrical Performance

Dieletric Strength	: 500 vRms
Insulation Resistance	: 1000 Megha Ohms Min.
Contact Resistance (mated)	: .015 Ohms (Max.)

4. Reference Standard

MIL–C–10544

5. Environmental

Operating Temperature :- -55°C to +85°C

6. Ordering Information

SL. NO.	MIL PART NUMBER	AMPHENOL PART NUMBER	CONNECTOR	NO. OF CONTACTS	TYPE OF TERMINATION	REAR SHELL DESIGN
1	U-77()/U	164-77/U	PLUG	10	SOLDER POCKET	STRAIGHT
2	U-78()/U	164-78/U	PLUG	10	SOLDER POCKET	STRAIGHT
3	U-79()/U	164-79/U	RECEPTACLE	10	SOLDER POCKET	STRAIGHT
4	U-126()/U	164-126/U*	RECEPTACLE	10	SOLDER POCKET	STRAIGHT
5	U-127()/U	164-127/U*	PLUG	10	SOLDER POCKET	RIGHT ANGLE
6	U-161()/U	164-161/U	PLUG	10	TAPER PIN	STRAIGHT

* For More Information Contact Factory

164-77/U Plug With Rigid Contacts, Solder Pocket Terminal, Straight Rear Shell

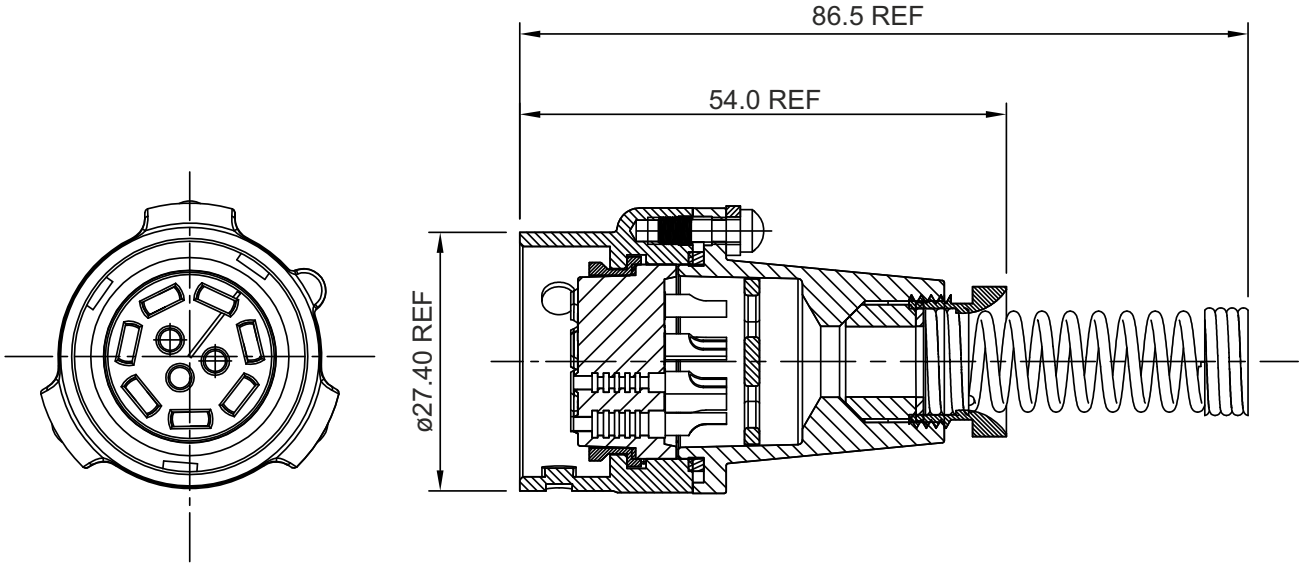

164-78/U Receptacle With Non Rigid Contacts, Solder Pocket Terminal, Straight Rear Shell

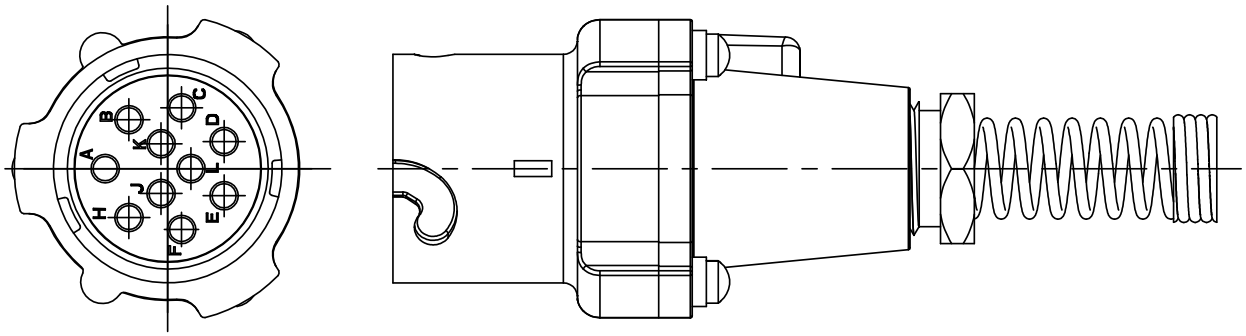

164-79/U Panel Mount Receptacle With Non Rigid Contacts, Solder Pocket Terminal

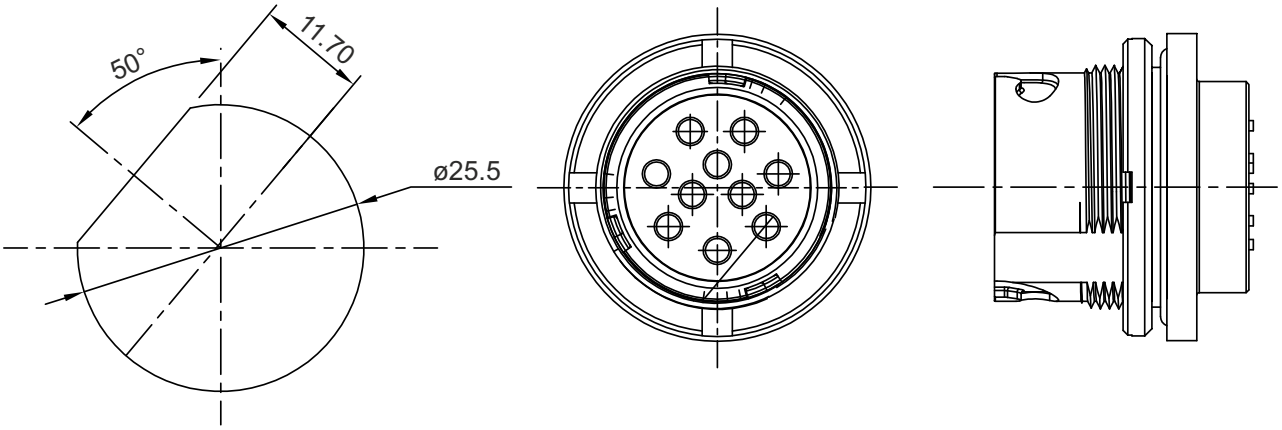

Recommended Panel Cut Out

164-126/U Panel Mount Plug With Rigid Contacts, Solder Pocket Terminal

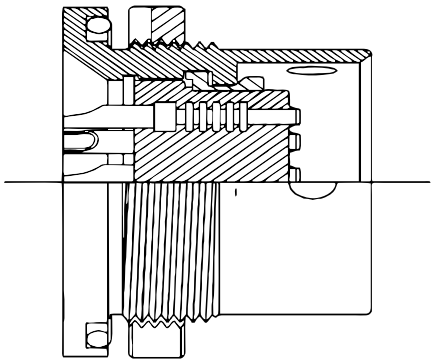

164-127/U Plug With Rigid Contacts, Solder Pocket Terminal, Right Angled Rear Shell

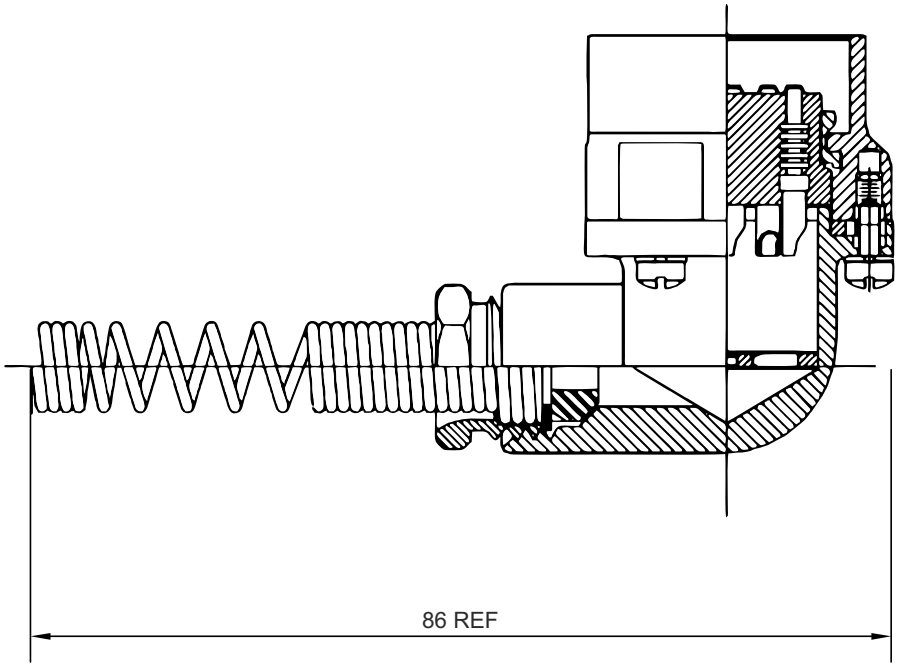

164-161/U Plug With Rigid Contacts, Solder Pocket Terminal, Right Angled Rear Shell

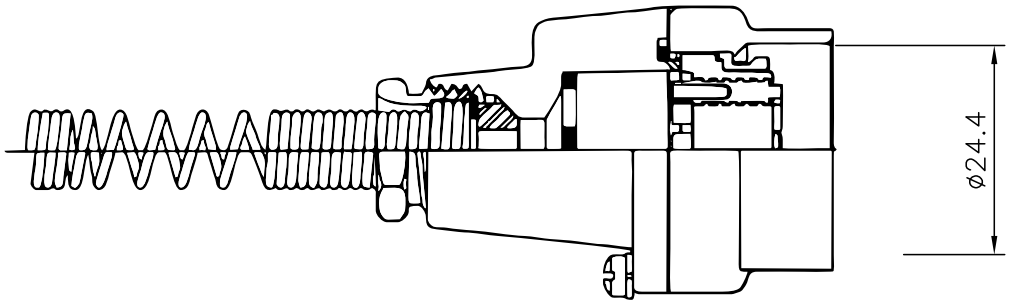

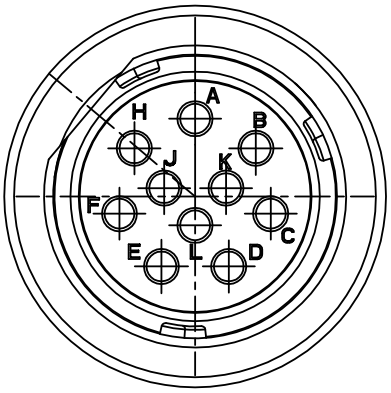

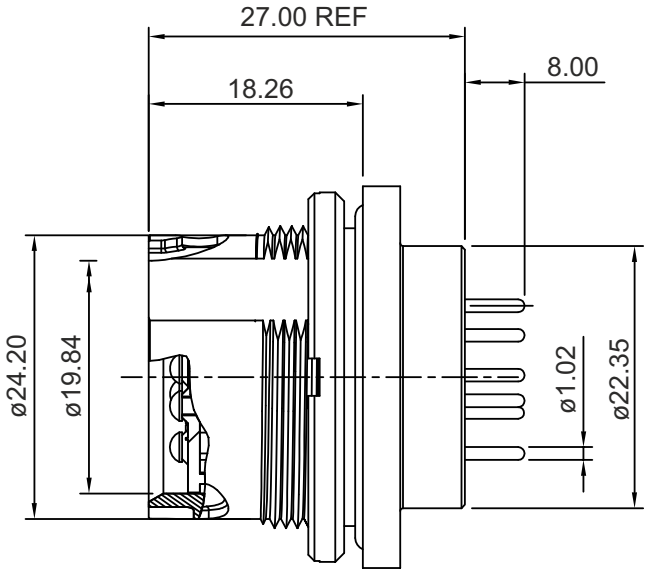

164-79/U—P PLAIN PIN DESIGN

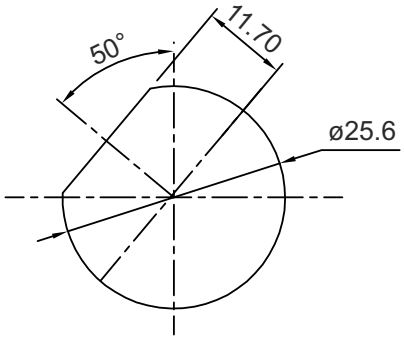

RECOMANDED PANEL CUT OUT

MODIFIER(XX)	øA	øB	C	D
NO MODIFIER	1.02	1.78	3.00	5.00
–1	1.02	2.26	2.92	4.29
–2	1.02	1.02	11.10	11.10
–8	0.71	2.26	4.78	14.99
–9	0.71	2.26	3.18	4.93
–10	0.71	2.26	5.54	6.53
–12	1.02	1.02	2.79	2.79
–13	0.71	2.26	3.81	11.10
–14	0.76	0.76	3.05	3.05
–15	0.71	2.26	3.56	9.91
–16	1.02	1.02	18.90	18.90
–20	0.76	0.76	14.33	14.33
–21	1.02	1.02	2.79	2.79
–22	0.65	2.25	3.10	5.00
–23	1.02	1.78	2.00	5.00

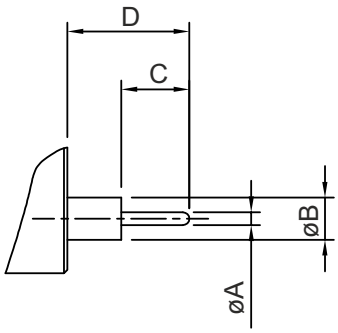

164-79/U—PL—XX STEPPED PIN DESIGN

All Dimensions Are For Reference Only

PCB Pin Co-ordinates

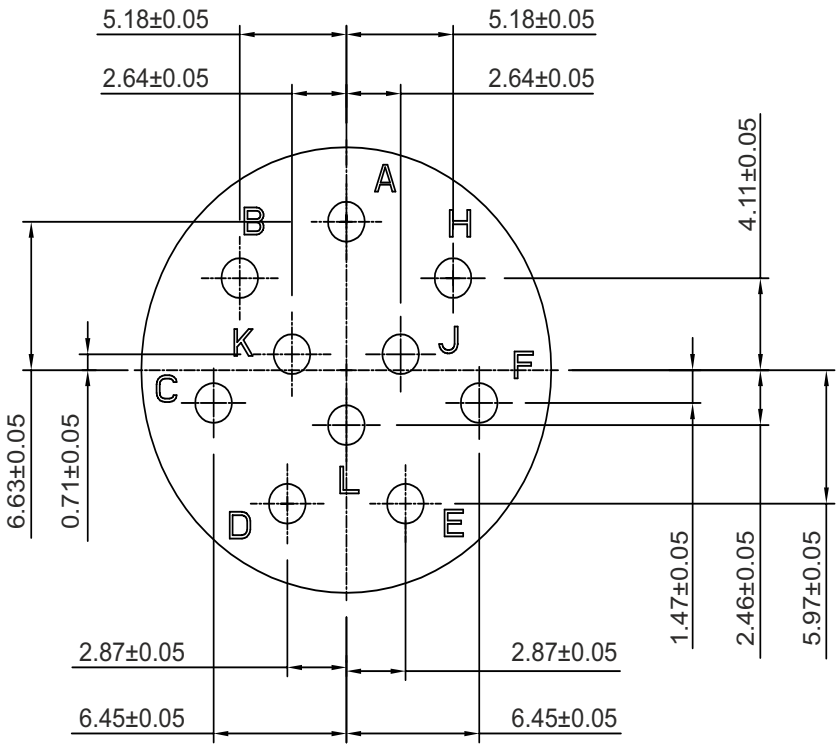

Specifications:

1. Ordering Information

164—79/U—P	: Plain Pin Design
164—79/U—P	: Stepped Pin Design

2. Materials & Finish

Front Shell	: Stainless Steel, Sand Blasted Finish.
Spanner Nut	: Stainless Steel, Sand Blasted Finish.
Inserts	: Diallylphthalate as per MIL–M–14F, type MDG
Contacts	: Copper Alloy, Gold plated .000030 In

3. Mechanical Properties

Durability	: 3000 Cycles Minimum.
Air Pressure	: 2.5psi.
Immersion	: 48 Hrs at 6 ft.

4. Electrical Performance

Dieletric Strength	: 500 vRms
Insulation Resistance	: 1000 Megha Ohms Min
Contact Resistance (mated)	: .015 Ohms (Max)

5. Reference Standard

STD	: — MIL–C–10544
PART NO	: — U–79/U

Notes:

Notice: All information, including illustrations given herein is believed to be accurate at the time of printing. In lieu of design advances, Amphenol reserves the right to change specifications without notice. This publication Series 164 Connectors AC16403 0118 supercedes all existing Amphenol literature on Series 164 Connectors.

NORTH AMERICA

Sales & Product Support

Amphenol PCD
72 Cherry Hill Drive
Beverly, MA 01915 USA
Tel: +1-978-624-3400
Fax: +1-978-927-1513
info@amphenolpcd.com
www.amphenolpcd.com
www.backshellworld.com

Amphenol Aerospace Operations
40-60, Delaware Avenue
Sidney, NY 13838-1395
Tel: +1-607-563-5011
Fax: +1-607-563-5357

Amphenol Canada
Meford Drive
Scarborough,
ON MIB 2X6
Tel: +416-291-4401
Fax: +416-292-0647

Amphenol Fiber Systems International
1300 Central Expressway North
Suite 100 Allen,Texas 75013, USA
Tel: +1-214-547-2400
Fax: +1-214-547-9344

EUROPE

France

Amphenol Socapex S.A.S.
948,Promenade de l'Arve
Bp29, Thyez Cedex
74311, France
Tel: +33-4-5089-2800
Fax: +33-4-5096-1941

United Kingdom

Amphenol Limited
Thanet Way, Whitstable
Kent CT5 3JF, England
Tel: +44-1227-773-200
Fax: 44-1227-276-571

Germany

Amphenol-Air LB GmbH
Am Kleinbahnhof 4
Saarlouis
D-66740, Germany
Tel: 49-6831-9810-00
Fax: 49-6831-9810-30

Italy

Via Barbaiana 5
20020 Lainate (Milano)
Italy
Tel :+39-02-93254.209
+39-02-93254.214
Fax:+39-02-93254-444

Center & East Europe
Amphenol
Wiener Gasse 68
2380 Perchtoldsdorf
Tel: +43-699-10396071
Fax: +43 699 40396071

Amphenol Air-LB
Immeuble Le Doublon
11, Avenue Dobonnet
Courbevoice-Cedex
92407, France
Ph: +33-1-4905-3000
Fax: +33-1-4905-3043

Spain

Amphenol Iberica
Edificio Burgosol Oficina
N 55 C/Comunidad de
Madrid 35 bis -
Las Rozas (Madrid)
Tel: +34-91-6407302
+34-91-6407306
Fax:+34-91-6407307

Austria

Amphenol Austria
Wiener Gasse 68
2380, Erchtoldsdarf,
Austria
Tel : + 43-69910396071
Fax: + 43-69940306071

Holland
Amphenol Benelux
Zadelmaker 121
NL-2401 PD Alphen
aan den Rijn Holland
Tel:+31-172-444903
Fax:+31-172 240254

Sweden
Amphenol
(Nordic & Baltic)
Ängsullsvägen 7
S-187 51 Täby.
Sweden
Tel: +46-85-1051816
+46-76-8418600
Fax: +46-70- 2634677
+46-70-2203197

ASIA

India

Amphenol Interconnect India Pvt. Ltd.
105 Bhosari Industrial Area
Pune-411026, India
Tel: +9120-3068-8305
Fax:+9120-2712-9158

Amphenol Interconnect India Pvt. Ltd.
61 Electronics City
Bangalore-560 100, India
Ph: +9180-2852-3838
Fax: +9180-2852-0418

Japan

Amphenol Japan
471-1, Deba, Ritto City
Shiga 520-3041, Japan
Tel: +81-77-553-8501
Fax: +81-77-551-2200

Korea
Amphenol Daeshin Electronics
558 SoSa, SongNae, Bucheon-City
Kyunggi-Do, Korea 420-130
Tel: +82-32-610-3800
Fax: +92-32-673-2507

Singapore
Amphenol East Asia Ltd.
72 Bendemeer Road
03-33 Luzerne
Singapore 339 941
Tel: 65-6294-2128
Fax: 65-6294-3522

China
Amphenol PCD Shenzhen
3/F Building, A4 Songbai
Industrial Park
East Road of Minghuan
Gongming Town, Baon District
Shenchen, China
Tel: +86-755-8173-8000
Fax: +86-755-8173-8180

ROW

Australia

Amphenol Australia Pty Ltd
2 Fiveways Boulevard
Keysborough
VIC 3173
Ph: +61-3-8796-8888
Fax: +61-3-8796-8801

Israel
Bar-Tec Ltd.
P.O. Box 279
Kfar Sava, 44102 Israel
Tel: +972-9-7644100
Fax: +972-9-7674324

Africa

Amphenol South Africa
30 Impala Road
2196 Sandton-Chistlehurston
South Africa
Tel: +27-11-783-9517
Fax: +27-11-783-9519

Maslak
34396 Istanbul
Tel: +90-212-335-2501
Fax: +90-212-335-2500

Russia

Amphenol Russia
8-2 Yaroslavskaja Str
129164 Moscow, Russia
Tel: +7-495-937-6341
Fax: +7-495-937-6319

Brazil
Amphenol do Brasil Ltda
Rua Diogo Moreira 132
CEP 05423-010
Sao Paulo-SP, Brazil
Tel: +55-11-3815-1003
Fax: +55-11-3815-1629

Argentina

Amphenol Argentina
Avenida Callao 930
2nd Floor, Office B Plaza
C1023AAP Buenos Aires
Argentina
Tel: 54-11-4815-6886
Fax: 54-11-4814-5779

Amphenol

A Global Company