SL 5.08/11/135 3.2SN OR BX

Weidmüller Interface GmbH & Co. KG
Klingenbergstraße 26
D-32758 Detmold
Germany

www.weidmueller.com

Product image



Similar to illustration

Male connectors with 135° outlet direction. The solder pin length is optimised for wave flow soldering. The pin headers provide space for labelling and can be coded.

General ordering data

Version	PCB plug-in connector, male header, open side, THT solder connection, 5.08 mm, Number of poles: 11, 135°, Solder pin length (l): 3.2 mm, tinned, orange, Box
Order No.	1603150000
Type	SL 5.08/11/135 3.2SN OR BX
GTIN (EAN)	4008190011673
Qty.	50 pc(s).
Product data	IEC: 400 V / 17 A UL: 300 V / 15 A
Packaging	Box

Creation date December 5, 2023 9:04:30 AM CET

SL 5.08/11/135 3.2SN OR BX

Weidmüller Interface GmbH & Co. KG
Klingenbergstraße 26
D-32758 Detmold
Germany

www.weidmueller.com

Technical data

Dimensions and weights

Depth	13.13 mm	Depth (inches)	0.517 inch
Height	15.5 mm	Height (inches)	0.61 inch
Height of lowest version	12.3 mm	Width	55.88 mm
Width (inches)	2.2 inch	Net weight	4.24 g

System specifications

Product family	OMNIMATE Signal - series BL/SL 5.08	Type of connection	Board connection
Mounting onto the PCB	THT solder connection	Pitch in mm (P)	5.08 mm
Pitch in inches (P)	0.2 inch	Outgoing elbow	135°
Number of poles	11	Number of solder pins per pole	1
Solder pin length (l)	3.2 mm	Solder pin length tolerance	+0.1 / -0.3 mm
Solder pin dimensions	d = 1.2 mm, Octagonal	Solder pin dimensions = d tolerance	0 / -0,03 mm
Solder eyelet hole diameter (D)	1.3 mm	Solder eyelet hole diameter tolerance (D)	+ 0,1 mm
L1 in mm	50.8 mm	L1 in inches	2 inch
Number of rows	1	Pin series quantity	1
Touch-safe protection acc. to DIN VDE 57 106	finger-safe unplugged/ back-of-hand-safe plugged	Touch-safe protection acc. to DIN VDE 0470	IP20 plugged/ IP10 unplugged
Protection degree	IP20	Volume resistance	≤5 mΩ
Can be coded	Yes		

Material data

Insulating material	PBT	Colour	orange
Colour chart (similar)	RAL 2000	Insulating material group	IIIa
Comparative Tracking Index (CTI)	≥ 200	UL 94 flammability rating	V-0
Contact material	CuSn	Contact surface	tinned
Layer structure of solder connection	1...3 µm Ni / 2...4 µm Sn matt	Layer structure of plug contact	1...3 µm Ni / 2...4 µm Sn matt
Storage temperature, min.	-40 °C	Storage temperature, max.	70 °C
Operating temperature, min.	-50 °C	Operating temperature, max.	100 °C
Temperature range, installation, min.	-25 °C	Temperature range, installation, max.	100 °C

Rated data acc. to IEC

tested acc. to standard	IEC 60664-1, IEC 61984	Rated current, min. number of poles (Tu=20°C)	17 A
Rated current, max. number of poles (Tu=20°C)	13 A	Rated current, min. number of poles (Tu=40°C)	15 A
Rated current, max. number of poles (Tu=40°C)	11 A	Rated voltage for surge voltage class / pollution degree II/2	400 V
Rated voltage for surge voltage class / pollution degree III/2	320 V	Rated voltage for surge voltage class / pollution degree III/3	250 V
Rated impulse voltage for surge voltage class/ pollution degree II/2	4 kV	Rated impulse voltage for surge voltage class/ pollution degree III/2	4 kV
Rated impulse voltage for surge voltage class/ contamination degree III/3	4 kV	Short-time withstand current resistance	3 x 1s with 120 A

SL 5.08/11/135 3.2SN OR BX

Weidmüller Interface GmbH & Co. KG
Klingenbergstraße 26
D-32758 Detmold
Germany

www.weidmueller.com

Technical data

Rated data acc. to CSA

Institute (CSA)		Certificate No. (CSA)	200039-1121690
Rated voltage (Use group B / CSA)	300 V	Rated voltage (Use group D / CSA)	300 V
Rated current (Use group B / CSA)	15 A	Rated current (Use group D / CSA)	10 A
Reference to approval values	Specifications are maximum values, details - see approval certificate.		

Rated data acc. to UL 1059

Institute (UR)		Certificate No. (UR)	E60693
Rated voltage (Use group B / UL 1059)	300 V	Rated voltage (Use group D / UL 1059)	300 V
Rated current (Use group B / UL 1059)	15 A	Rated current (Use group D / UL 1059)	10 A
Reference to approval values	Specifications are maximum values, details - see approval certificate.		

Packing

Packaging	Box	VPE length	226 mm
VPE width	72 mm	VPE height	60 mm

Classifications

ETIM 6.0	EC002637	ETIM 7.0	EC002637
ETIM 8.0	EC002637	ETIM 9.0	EC002637
ECLASS 9.0	27-44-04-02	ECLASS 9.1	27-44-04-02
ECLASS 10.0	27-44-04-02	ECLASS 11.0	27-46-02-01
ECLASS 12.0	27-46-02-01	ECLASS 13.0	27460201

SL 5.08/11/135 3.2SN OR BX

Weidmüller Interface GmbH & Co. KG
Klingenbergstraße 26
D-32758 Detmold
Germany

www.weidmueller.com

Technical data

Important note

IPC conformity	Conformity: The products are developed, manufactured and delivered according international recognized standards and norms and comply with the assured properties in the data sheet resp. fulfill decorative properties in accordance with IPC-A-610 "Class 2". Further claims on the products can be evaluated on request.
Notes	• Additional variants on request • Gold-plated contact surfaces on request • Rated current related to rated cross-section & min. No. of poles. • P on drawing = pitch • Rated data refer only to the component itself. Clearance and creepage distances to other components are to be designed in accordance with the relevant application standards. • In accordance with IEC 61984, OMNIMATE-connectors are connectors without breaking capacity (COC). During designated use, connectors are not allowed to be engaged or disengaged when live or under load • Long term storage of the product with average temperature of 50 °C and maximum humidity 70%, 36 months

Approvals

Approvals	
ROHS	Conform
UL File Number Search	UL Website
Certificate No. (UR)	E60693

Downloads

Approval/Certificate/Document of Conformity	Declaration of the Manufacturer
Engineering Data	CAD data – STEP
Catalogues	Catalogues in PDF-format
Brochures	FL DRIVES EN MB DEVICE MANUF. EN FL DRIVES DE FL BUILDING SAFETY EN FL APPL LED LIGHTING EN FL INDUSTR.CONTROLS EN FL MACHINE SAFETY EN FL HEATING ELECTR EN FL APPL_INVERTER EN FL_BASE_STATION_EN FL ELEVATOR EN FL POWER SUPPLY EN FL 72H SAMPLE SER EN PO OMNIMATE EN

SL 5.08/11/135 3.2SN OR BX

Weidmüller Interface GmbH & Co. KG
Klingenbergstraße 26
D-32758 Detmold
Germany

www.weidmueller.com

Drawings

Dimensional drawing

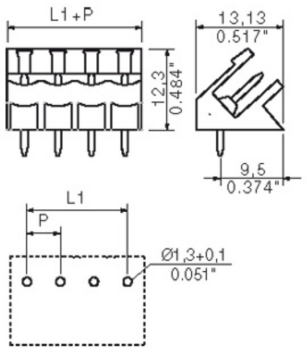

SL 5.08/11/135 3.2SN OR BX

Weidmüller Interface GmbH & Co. KG
Klingenbergstraße 26
D-32758 Detmold
Germany

www.weidmueller.com

Accessories

Coding elements



Only connects what is supposed to be connected: the right connection at the right place.
Coding elements and locking devices clearly assign connecting elements during the manufacturing process and operation
The coding elements and locking devices are inserted prior to assembly or during the cable assembly phase.
The Weidmüller alternative: configure online using the variant configurator to precode prior to delivery.
Incorrect assembly on the circuit board and incorrect plugging of connecting elements is no longer possible.
The advantage: no troubleshooting during manufacture and no operational errors by the user.

General ordering data

Type	BLZ/SL KO BK BX	Version	Product data	Packaging
Order No.	1545710000	PCB plug-in connector, Accessories, Coding element, black, Number		Box
GTIN (EAN)	4008190087142	of poles: 1		
Qty.	50 pc(s).			

Type	BLZ/SL KO OR BX	Version	Product data	Packaging
Order No.	1573010000	PCB plug-in connector, Accessories, Coding element, orange, Number		Box
GTIN (EAN)	4008190048396	of poles: 1		
Qty.	100 pc(s).			

Additional accessories



No task is too small when creating the perfect solution. br />
Connections form just one part of the overall process. Small details are often the key to the perfect solution in applications where potentials are tested, grouped or even isolated.
A system is not a system without small but useful details:

- Test plugs - ensure reliable pick-up from diagnostic sockets
- Cross-connectors - ensure a stable electrical distribution contact directly at the connection
- Compartment partition elements - divide a large number of male connectors into several separate socket connector channels
- Locks and clips - optional vibration-resistant clip-on connection or mounting for male and female connectors

In tandem with the manufacturing process and application - more accessories = smaller workload

General ordering data

Type	SL AT OR	Version	Product data	Packaging
Order No.	1598300000	PCB plug-in connector, Accessories, Spacer, orange, Number of poles:		Box
GTIN (EAN)	4008190189266	1		
Qty.	100 pc(s).			

SL 5.08/11/135 3.2SN OR BX

Weidmüller Interface GmbH & Co. KG
Klingenbergstraße 26
D-32758 Detmold
Germany

www.weidmueller.com

Accessories

Type	SL AT SW	Version	Product data	Packaging
Order No.	1770240000	PCB plug-in connector, Accessories, Spacer, black, Number of poles: 1		Box
GTIN (EAN)	4032248117710			
Qty.	100 pc(s).			

MASSE OHNE TOLERANZ SIND KEINE PRUEFMASSE
DIMS. WITHOUT TOLERANCE ARE NOT CONTROL DIMS.

DIE DEUTSCHE VERSION IST VERBINDLICH
THE GERMAN VERSION IS BINDING

WEITERGABE SOWIE VERVIELFAELTIGUNG DIESES DOKUMENTS, VERWERTUNG UND MITTEILUNG SEINES INHALTS SIND VERBOTEN, SOWEIT NICHT AUSDRUECKLICH GESTATTET.
ZUWIDERHANDLUNGEN VERPFLICHTEN ZU SCHADENERSATZ. ALLE RECHTE FUER DEN FALL DER PATENT-, GEBRAUCHSMUSTER- ODER GESCHMACKSMUSTEREINTRAGUNG VORBEHALTEN.
THE REPRODUCTION, DISTRIBUTION AND UTILIZATION OF THIS DOCUMENT AS WELL AS THE COMMUNICATION OF ITS CONTENTS TO OTHERS WITHOUT EXPLICID AUTHORIZATION IS PROHIBITED.
OFFENDERS WILL BE HELD LIABLE FOR THE PAYMENT OF DAMAGES. WEIDMUELLER EXCLUSIVELY RESERVES THE RIGHT TO FILE FOR PATENTS, UTILITY MODELS OR DESIGNS.
© WEIDMUELLER INTERFACE GmbH & Co.KG

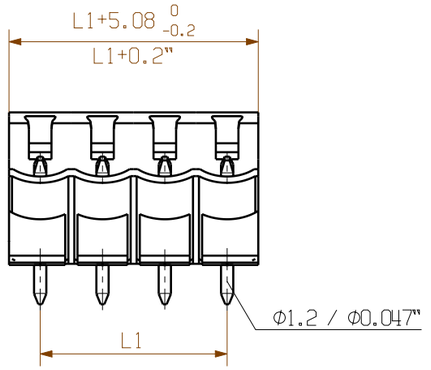

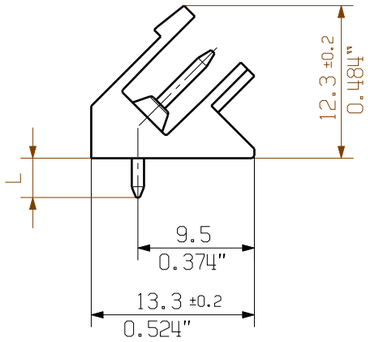

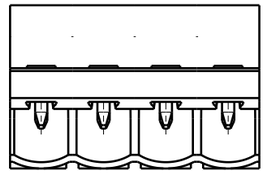

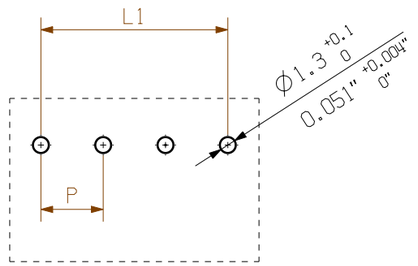

HOLE PATTERN

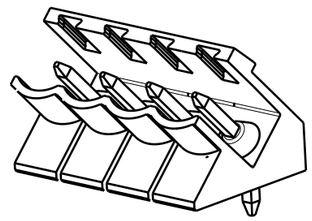

STIFTLAENGE L PIN LENGTH L	TOLERANZ TOLERANC
3,2	0,1
	-0,3
4,5	0,1
	-0,3

n	L1 [mm]	L1 [Inch]
24	116,84	4,600
23	111,76	4,400
22	106,68	4,200
21	101,60	4,000
20	96,52	3,800
19	91,44	3,600
18	86,36	3,400
17	81,28	3,200
16	76,20	3,000
15	71,12	2,800
14	66,04	2,600
13	60,96	2,400
12	55,88	2,200
11	50,80	2,000
10	45,72	1,800
9	40,64	1,600
8	35,56	1,400
7	30,48	1,200
6	25,40	1,000
5	20,32	0,800
4	15,24	0,600
3	10,16	0,400
2	5,08	0,200

P= RASTER / PITCH

SHOWN: SL5.08/04/135

For the mounting of PCBs, it should be noted that the rated data relates only to the PCB components alone.
The neccessary creepage and clearance paths must be observed in connection with the respective applicant in accordance to IEC 664 / VDE 0110.
The current-carrying capacity and pitch tolerance is to be determined according to DIN IEC 326 part 3 very fine.

Weidmüller PCB components are tested to the DIN EN 61984 standard, and are valid for its field of application.
Provided that the components are used to the intended purpose, all requirements with respect to the occuring of electrical, mechanical, thermic and corrosive stress will be satisfied.

RoHS COMPLIANT

METRIC TOLERANCES:
X. = ±0.3
X.X = ±0.1
X.XX = ±0.05

54686/0 17.11.10 HERTEL_S 01
MODIFICATION

CAT.NO.: .

Weidmüller

C 19768 09
DRAWING NO. ISSUE NO.

SHEET 01 OF 02 SHEETS

	DATE	NAME
DRAWN	09.07.2003	GROESCHL_A
RESPONSIBLE		HERTEL_S
CHECKED	18.11.2010	HECKERT_M
APPROVED		HECKERT_M

SCALE: 2:1

SUPERSEDES: .

SL 5.08/../135...
STIFTLEISTE
PINHEADER

PRODUCT FILE: SL 5.08/135 7292

Wave Solder Profile

Recommended wave solderding profiles

Weidmüller Interface GmbH & Co. KG
Klingenbergstraße 16
D-32758 Detmold
Germany
Fon: +49 5231 14-0
Fax: +49 5231 14-292083
www.weidmueller.com

Single Wave:

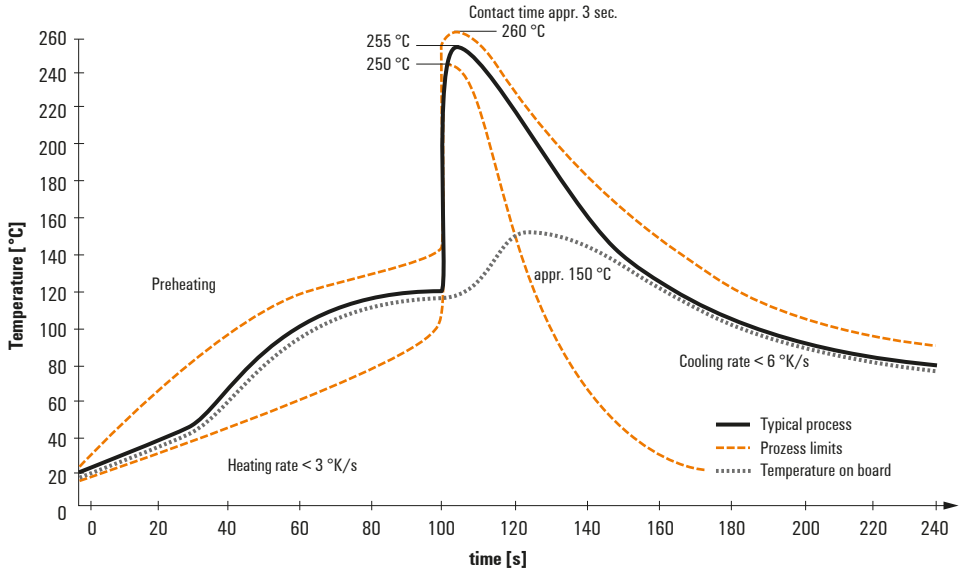

Double Wave:

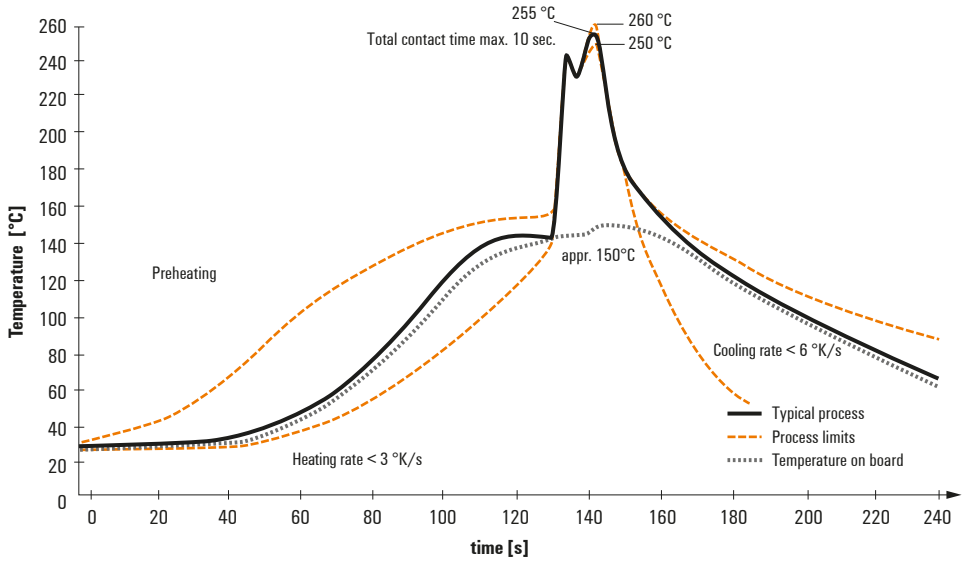

Wave soldering profiles

Wired connection elements should be processed in accordance with the DIN EN 61760-1 standard. We have included two recommendations for practical wave soldering profiles, with which Weidmüller PCB terminals and connectors are qualified.

When choosing a suitable profile for your application, the following factors also need to be considered:
- PCB thickness
- Proportion of Cu in the layers
- Single/double-sided assembly
- Product range
- Heating and cooling rates

The single and double wave profiles each indicate the recommended operating range, including the maximum soldering temperature of 260°C. In practice, the maximum soldering temperature is quite often well below the above maximum profile.

We reserve the right to make technical changes.