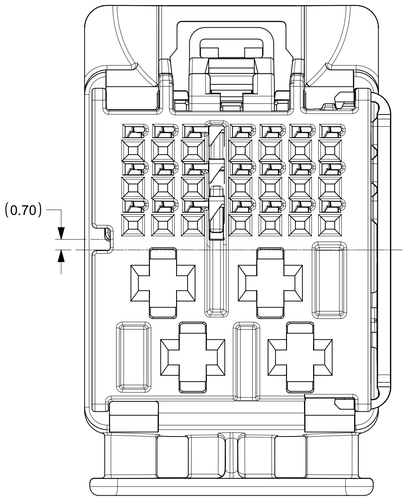

25 WAY CONNECTOR ASSEMBLY
KEY 1 & KEY 5

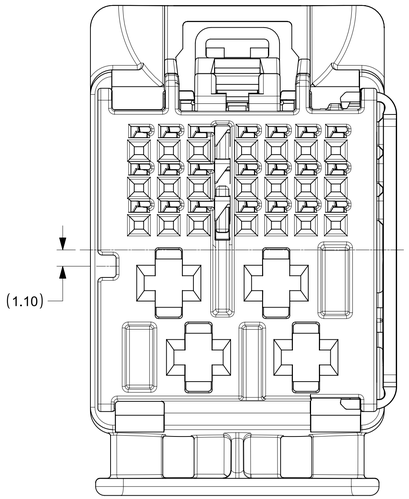

25 WAY CONNECTOR ASSEMBLY
KEY 2 & KEY 6

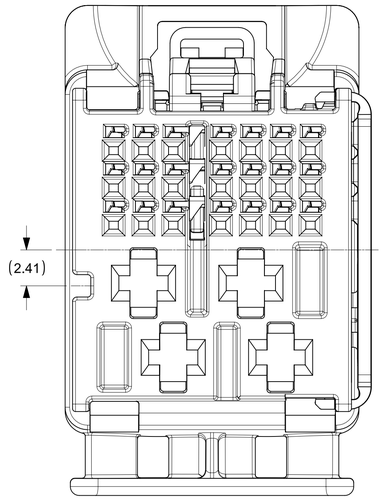

25 WAY CONNECTOR ASSEMBLY
KEY 3 & KEY 7

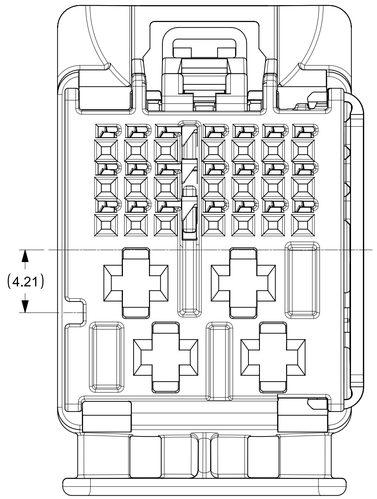

25 WAY CONNECTOR ASSEMBLY
KEY 4 & KEY 8

PART NUMBER	PLATING	SUPPLIER	WIRE GAGE (mm2)	TERMINAL FAMILY	WIRE SPECIFICATION
200096-3101	TIN PLATING	MOLEX	0.35	TAK FAMILY (0.5 mm)	VW 60306 OR GMW 15626 (SEE APPLICATION SPECIFICATION FOR MORE DETAILS)
200096-3201	TIN PLATING	MOLEX	0.13	TAK FAMILY (0.5 mm)	
2272196-2	TIN PLATING	TE	0.35	Generation 50 Locking Lance (0.5mm)	SAE/ J1128 THIN WALL INSULATION
2272196-1	TIN PLATING	TE	0.13	Generation 50 Locking Lance (0.5mm)	
1-968851-1	TIN PLATING	TE	1.0 - 2.5	AMP MCP 2.8	GMW 15626 INSULATION TYPE FLR (REGULAR THIN WALL)
1-968849-1	TIN PLATING	TE	0.5 - 1.0	AMP MCP 2.8	
15457849	TIN PLATING	DELPHI	1.5 - 2.5	CTS 2.8mm	
15457848	TIN PLATING	DELPHI	0.5 - 1.0	CTS 2.8mm	

NOTES: VALID UNLESS OTHERWISE SPECIFIED
1. GENERAL:
a. APPLICATION SPECIFICATION SEE: AS-160014-001
b. PRODUCT SPECIFICATION SEE: PS-160014-001
c. PACKAGING SPECIFICATION PER MOLEX DRAWING: PK-31302-266
d. PARTS MUST BE IN COMPLIANCE TO MOLEX CHEMICAL SUBSTANCES FOR PRODUCTS AND PACKAGING SPECIFICATION: ES-40000-5016
e. DATA MUST BE SUBMITTED UNDER THE MOLEX PART NUMBER TO IMDS (COMPANY ID#13255)

2. DESIGN - MATERIALS:
a. SEE BOM TABLE

3. DESIGN - GEOMETRY:
a. ALL GRAPHIC DATA IS BASIC (NO TOLERANCE) AND MUST BE TAKEN FROM THE DATA FILE AT ITS LATEST REVISION.
b. PRODUCT DESIGN MODEL NUMBER(S): SEE BOM TABLE
c. GEOMETRIC DIMENSIONS AND TOLERANCES PER ASME Y14.5-2009
d. EDGES AND UNDIMENSIONED DETAILS PER ISO13715
e. CORNERS SHOWN AS SHARP TO BE R 0.2 MAX.
f. MARKED TEXT TO INCLUDE RECYCLING CODE, CAVITY ID, VENDOR IDENTIFICATION AND CUSTOMER MATERIAL NUMBER.
1. LASER ETCHED DATE CODE
1ST THROUGH 2ND DIGIT = CALENDAR YEAR
3RD THROUGH 5TH DIGIT = "DAY #" OF YEAR
6TH THROUGH 7TH DIGIT = HOUR OF DAY
8TH THROUGH 9TH DIGIT = MINUTE OF HOUR
10TH THROUGH 11TH DIGIT = SECOND OF MINUTE
2. LASER ETCHED ASSEMBLY LINE
"_X" DENOTES CAPACITY ASSEMBLY LINE SUCH AS"_2" OR MORE IN FUTURE

4. DESIGN - MANUFACTURING:
a. VISUAL DEFECTS SHALL MEET COSMETIC STANDARD PS-45499-002 (Class B)

MOLEX ASSEMBLY PART NO.'S	
1600270011	KEY 1
1600270012	KEY 2
1600270013	KEY 3
1600270014	KEY 4
1600270015	KEY 5
1600270016	KEY 6
1600270017	KEY 7
1600270018	KEY 8

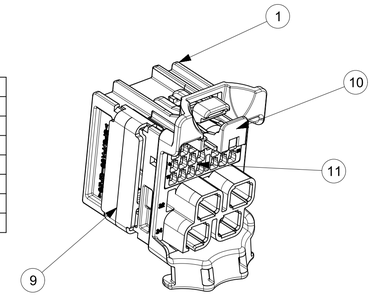

SCALE 2:1

ITEM	DESCRIPTION	COLOR	RECYCLING CODE	WEIGHT (GRAMS)	RIB OPTION	NO OF ITEMS REQUIRED							
1	OUTER SHROUD - KEY 1	LIGHT GREEN B	SPS/PA66-GF20	4.1	A	1							
2	OUTER SHROUD - KEY 2	STONE GRAY	SPS/PA66-GF20	4.1	A		1						
3	OUTER SHROUD - KEY 3	BLACK	SPS/PA66-GF20	4.1	A			1					
4	OUTER SHROUD - KEY 4	DARK GRAY	SPS/PA66-GF20	4.1	A				1				
5	OUTER SHROUD - KEY 5	DK PURPLE A	SPS/PA66-GF20	4.1	B					1			
6	OUTER SHROUD - KEY 6	TBD	SPS/PA66-GF20	4.1	B						1		
7	OUTER SHROUD - KEY 7	TBD	SPS/PA66-GF20	4.1	B							1	
8	OUTER SHROUD - KEY 8	LT GRAY	SPS/PA66-GF20	4.1	B								1
9	ISL	NATURAL	SPS-GF30	0.37	N/A	1	1	1	1	1	1	1	1
10	CPA	NATURAL	PA66-GF50	0.08	N/A	1	1	1	1	1	1	1	1
11	INNER HOUSING	STONE GRAY	SPS/PA66-GF20	1.04	N/A	1	1	1	1				
12	INNER HOUSING	STONE GRAY	SPS/PA66-GF20	1.04	N/A					1	1	1	1

RIB OPTION A

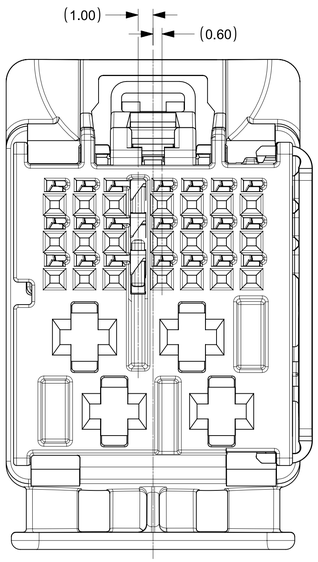

RIB OPTION B

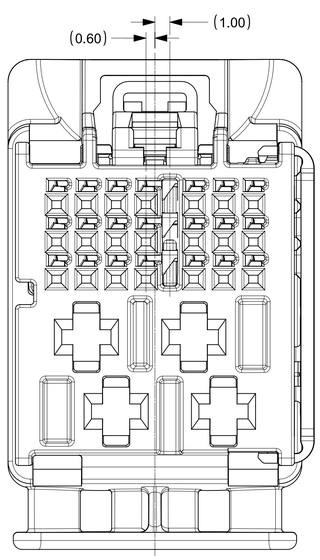

INSPECTION BALLOON NUMBER LOG
PER DRAWING REVISION: A3
LAST BALLOON NUMBER: 2
ADDED BALLOON NUMBER: NONE
DELETED BALLOON NUMBER: NONE

REVISION	DESCRIPTION
A4	UPDATED LASER MARK TO INCLUDE NEW CAPACITY ASSEMBLY LINE
A3	UPDATED TAK50 TERMINAL PNS 21-July-2021 YPENG47 ECN 648438

THIS DRAWING CONTAINS INFORMATION THAT IS PROPRIETARY TO MOLEX ELECTRONIC TECHNOLOGIES, LLC AND SHOULD NOT BE USED WITHOUT WRITTEN PERMISSION

FUNCTIONAL SYMBOLS
FA = 0
FC = 0
FF = 0
DIVISIONAL SYMBOLS

DIMENSION UNITS: mm
SCALE: 5:1

GENERAL TOLERANCES (UNLESS SPECIFIED)

ANGULAR TOL	± 3.0°
4 PLACES	±
3 PLACES	±
2 PLACES	± 0.300
1 PLACE	± 0.30
0 PLACES	± 0.30

DRAFT WHERE APPLICABLE MUST REMAIN WITHIN DIMENSIONS

CURRENT REV DESC: SEE REVISION SHEET

PHASE: Design Production
CO NO: CO-000000983
DRWN: Kun Du 2022-05-12
CHK'D: Ringo Hu 2022-07-27
APPR: Colin Zhang 2022-11-08
INITIAL REVISION:
DRWN: RCARLSON
APPR:

THIRD ANGLE PROJECTION | DRAWING: D-SIZE | SERIES: 160027

molex

25WAY STAK50H HYBRID ASSEMBLY
CONNECTOR ASSEMBLY

PRODUCT SALES DRAWING

DOCUMENT NUMBER	DOC TYPE	DOC PART	REVISION
1600270011	PSD	000	A4

MATERIAL NUMBER	CUSTOMER	SHEET NUMBER
	GENERAL MARKET	1 OF 2

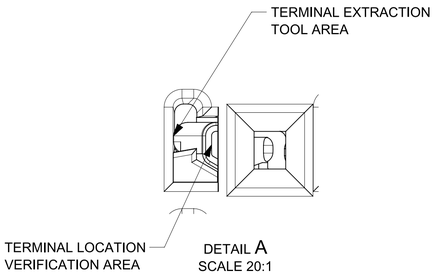

DETAIL A
SCALE 20:1

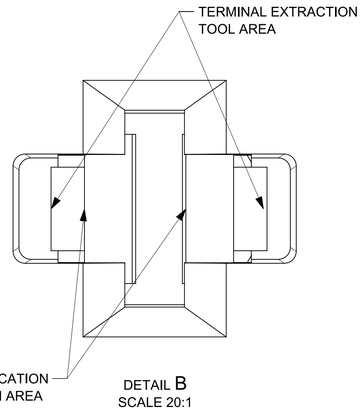

DETAIL B
SCALE 20:1

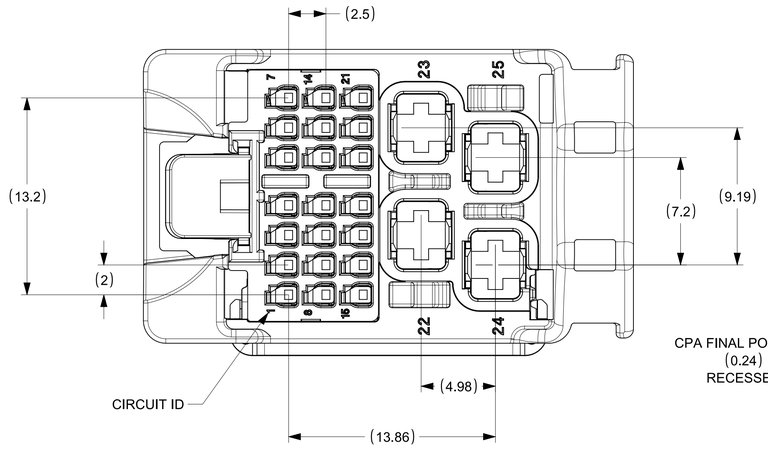

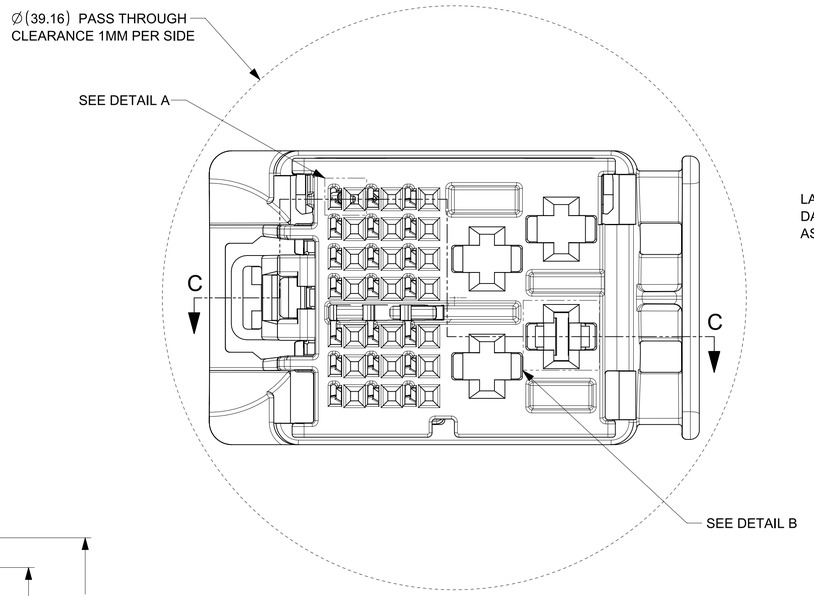

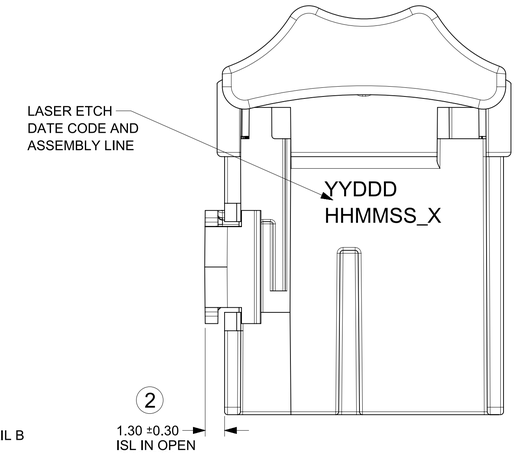

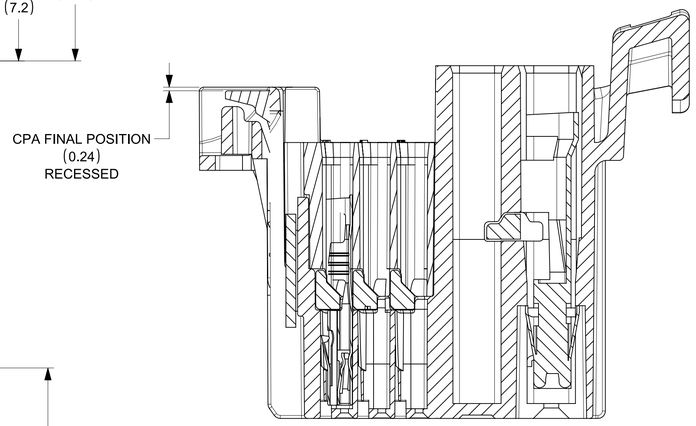

TERMINALS, ISL, AND CPA
SHOWN IN CLOSED POSITION
SECTION C-C

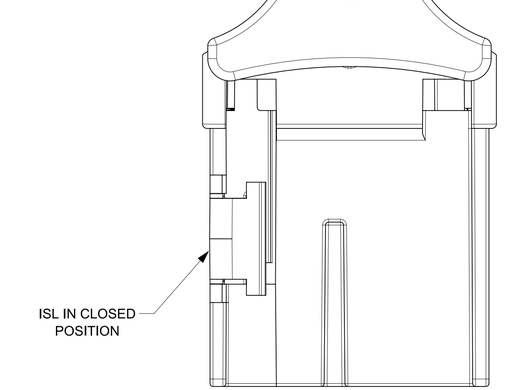

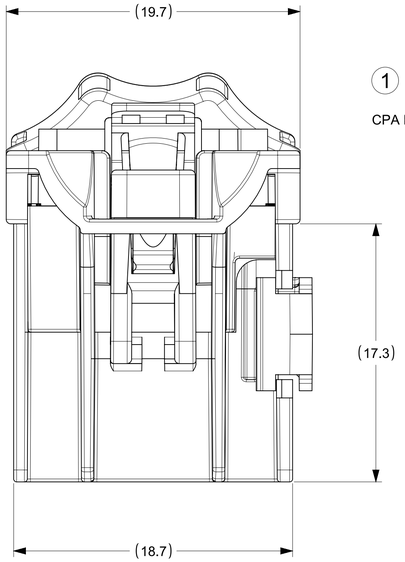

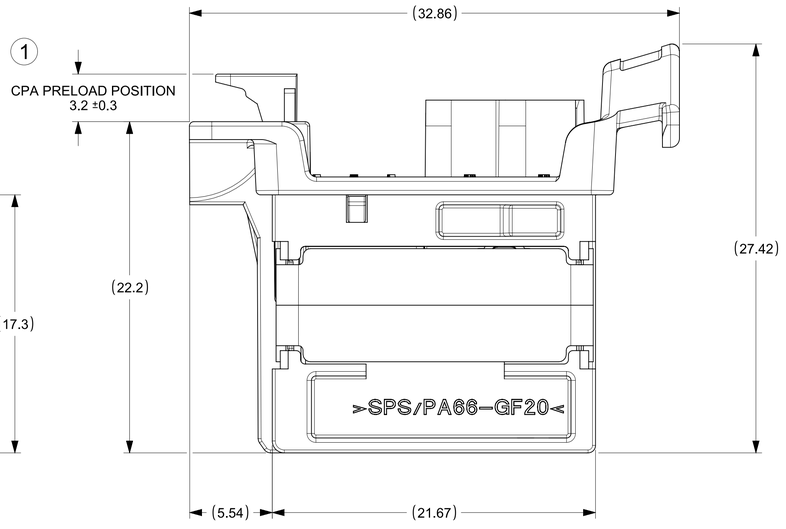

FUNCTIONAL SYMBOLS	THIS DRAWING CONTAINS INFORMATION THAT IS PROPRIETARY TO MOLEX ELECTRONIC TECHNOLOGIES, LLC AND SHOULD NOT BE USED WITHOUT WRITTEN PERMISSION		
FA = 0	DIMENSION UNITS: mm	SCALE: 5:1	CURRENT REV DESC: SEE REVISION SHEET
FC = 0	GENERAL TOLERANCES (UNLESS SPECIFIED)		
FP = 0	ANGULAR TOL ± 3.0°		PHASE: Design Production
DIVISIONAL SYMBOLS	4 PLACES ±		CO NO: CO-000000983
	3 PLACES ±		DRWN: Kun Du 2022-05-12
	2 PLACES ± 0.300		CHK'D: Ringo Hu 2022-07-27
	1 PLACE ± 0.30		APPR: Colin Zhang 2022-11-08
	0 PLACES ± 0.30		INITIAL REVISION:
	DRAFT WHERE APPLICABLE MUST REMAIN WITHIN DIMENSIONS		DRWN: RCARLSON
	THIRD ANGLE PROJECTION	DRAWING: D-SIZE	APPR:
		SERIES: 160027	

molex

25WAY STAK50H HYBRID ASSEMBLY
CONNECTOR ASSEMBLY

PRODUCT SALES DRAWING

DOCUMENT NUMBER	DOC TYPE	DOC PART	REVISION
1600270011	PSD	000	A4

MATERIAL NUMBER	CUSTOMER	SHEET NUMBER
	GENERAL MARKET	2 OF 2