RAFIX 22 FS+ - Keylock switch compact, square collar



1.30.275.371/0100

Other lock variants available on request.

Included: 2 keys.

General information	
Color of front ring	black
Form of collar	square

Dimensions	
Dimensions of collar	29.8 x 29.8 mm
Width of collar	29.8 mm
Overall height	44.1 mm
Mounting depth	PCB 9.2 mm, QC 27 mm
Mounting hole	22.3 mm
Key grid	30 x 30 mm

Mechanical design	
Mounting	ring nut
Contact function	latching
Wafers	5
Illuminability	no
Lock type	001
Main key	on request
Rotating angle	1 x 90°, form V
Key removal position	0+1
Torque for nut ring	1.2 Nm

Mechanical characteristics	
Torque max.	1.3 Nm

Other specifications	
Operating life	300,000 momentary / 50,000 latching / 30,000 with key removal cycle
B10	400,000 momentary / 65,000 latching / 40,000 with key removal cycle
Degree of protection from front side	IP65 (DIN EN 60529)
Ambient temp. operating min.	-25 °C
Ambient temp. operating max.	+70 °C
Storage temperature min.	-40 °C
Storage temperature max.	+80 °C
Environmental restistance	acc. to IEC 60068-2-14, -30, -33 and -78
ESD-strength lock / contact	15 kV

Technical data are approximate and intended solely for general orientation in the selection of a product.
Subject to modifications and errors. Images and other graphics may only be similar.
For more information, refer to www.rafi.de chapter Imprint / Data Protection.

ESD-strength key / front panel	15 kV
Salt spray	IEC 600 68-2-11
ROHS compliant	yes
REACH compliant	yes

Panel cut-out to IEC 60947-5-1

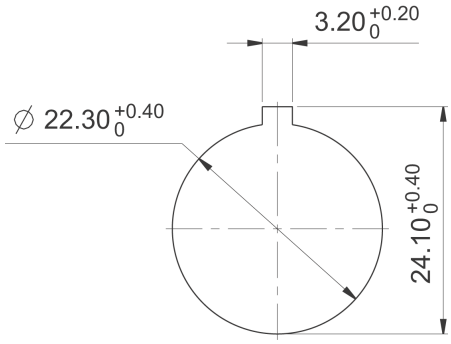

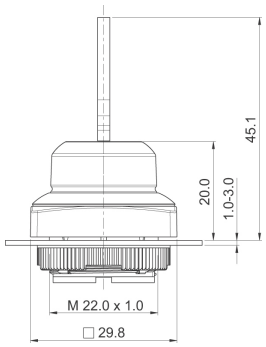





Technical data are approximate and intended solely for general orientation in the selection of a product.
Subject to modifications and errors. Images and other graphics may only be similar.
For more information, refer to www.rafi.de chapter Imprint / Data Protection.