Data sheet

B2CF 3.50/36/180F SN BK BX

Weidmüller Interface GmbH & Co. KG
Klingenbergstraße 26
D-32758 Detmold
Germany

www.weidmueller.com

Product image

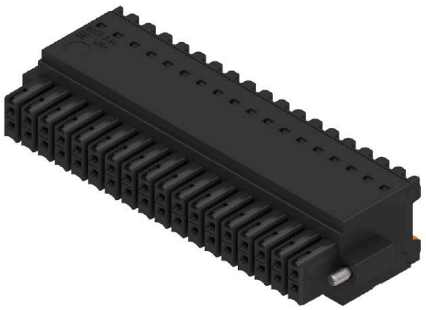

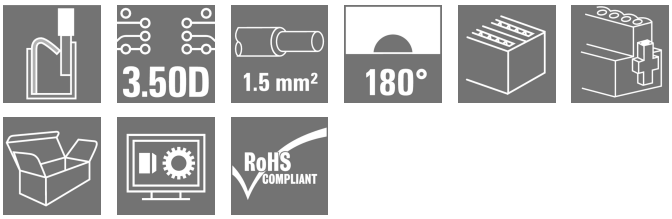

Two-row female plug with PUSH IN spring connection
- Simply insert the prepared wire - and you're done
- Intuitive to use because
- the wire-entry area and handling area are clearly separated
- Integrated push-buttons for opening the terminal point
- High component density because of low heights
- Optional: locking and releasing require no tools when using Weidmüller's
  release latch (LR) or release lever (LH)

General ordering data

Version	PCB plug-in connector, female plug, 3.50 mm, Number of poles: 36, 180°, PUSH IN with push button, Clamping range, max. : 1.5 mm², Box
Order No.	1278030000
Type	B2CF 3.50/36/180F SN BK BX
GTIN (EAN)	4050118068474
Qty.	24 items
Product data	IEC: 320 V / 13.4 A / 0.14 - 1.5 mm² UL: 300 V / 9.5 A / AWG 30 - AWG 16
Packaging	Box

Data sheet

B2CF 3.50/36/180F SN BK BX

Weidmüller Interface GmbH & Co. KG
Klingenbergstraße 26
D-32758 Detmold
Germany

www.weidmueller.com

Technical data

Approvals

Approvals	
ROHS	Conform
UL File Number Search	UL Website
Certificate No. (cURus)	E60693

Dimensions and weights

Depth	25.25 mm	Depth (inches)	0.9941 inch
Height	15.2 mm	Height (inches)	0.5984 inch
Width	70 mm	Width (inches)	2.7559 inch
Net weight	23.88 g		

Environmental Product Compliance

RoHS Compliance Status	Compliant without exemption	
REACH SVHC	No SVHC above 0.1 wt%	
Product Carbon Footprint	Cradle to gate	0.566 kg CO2eq.

System Parameters

Product family	OMNIMATE Signal - series B2C/S2C 3.50 - 2-row		
Type of connection	Field connection		
Wire connection method	PUSH IN with push button		
Pitch in mm (P)	3.50 mm		
Pitch in inches (P)	0.138 "		
Conductor outlet direction	180°		
Number of poles	36		
L1 in mm	59.50 mm		
L1 in inches	2.343 "		
Number of rows	1		
Pin series quantity	2		
Rated cross-section	15 mm²		
Touch-safe protection acc. to DIN VDE 57 106	Safe from finger touch		
Touch-safe protection acc. to DIN VDE 0470	IP20 plugged		
Protection degree	IP20, when fully mounted		
Can be coded	Yes		
Stripping length	10 mm		
Screwdriver blade	0.4 x 2.5		
Screwdriver blade standard	DIN 5264		
Plugging cycles	25		
Plugging force/pole, max.	3.5 N		
Pulling force/pole, max.	3.5 N		
Tightening torque	Torque type	Screw flange	
	Usage information	Tightening torque	min. 0.15 Nm
			max. 0.2 Nm

Material data

Insulating material	PA 66 GF 30	Colour	black
Colour chart (similar)	RAL 9011	Insulating material group	II

B2CF 3.50/36/180F SN BK BX

Weidmüller Interface GmbH & Co. KG
Klingenbergstraße 26
D-32758 Detmold
Germany

www.weidmueller.com

Technical data

Comparative Tracking Index (CTI)	≥ 600	Insulation resistance	≥ 108 Ω
Moisture Level (MSL)		UL 94 flammability rating	V-0
Contact material	Copper alloy	Contact surface	tinned
Layer structure of plug contact	2...5 µm Sn hot-dip tinned	Storage temperature, min.	-40 °C
Storage temperature, max.	70 °C	Operating temperature, min.	-50 °C
Operating temperature, max.	120 °C	Temperature range, installation, min.	-40 °C
Temperature range, installation, max.	120 °C		

Conductors suitable for connection

Clamping range, min.	0.14 mm²		
Clamping range, max.	1.5 mm²		
Wire connection cross section AWG, min.	AWG 30		
Wire connection cross section AWG, max.	AWG 16		
Solid, min. H05(07) V-U	0.14 mm²		
Solid, max. H05(07) V-U	1.5 mm²		
Flexible, min. H05(07) V-K	0.14 mm²		
Flexible, max. H05(07) V-K	1.5 mm²		
w. plastic collar ferrule, DIN 46228 pt 4, min.	0.14 mm²		
w. plastic collar ferrule, DIN 46228 pt 4, max.	1 mm²		
w. wire end ferrule, DIN 46228 pt 1, min.	0.14 mm²		
w. wire end ferrule, DIN 46228 pt 1, max.	1.5 mm²		
Clampable conductor	wire end ferrule	Stripping length	nominal 10 mm
		Recommended wire-end ferrule	H0,14/12 GR SV
	wire end ferrule	Stripping length	nominal 10 mm
		Recommended wire-end ferrule	H0,25/12 HBL SV
	wire end ferrule	Stripping length	nominal 10 mm
		Recommended wire-end ferrule	H0,34/12 TK SV
	wire end ferrule	Stripping length	nominal 12 mm
		Recommended wire-end ferrule	H0,5/16 OR SV
		Stripping length	nominal 10 mm
		Recommended wire-end ferrule	H0,5/10
	wire end ferrule	Stripping length	nominal 12 mm
		Recommended wire-end ferrule	H0,75/16 W SV
		Stripping length	nominal 10 mm
		Recommended wire-end ferrule	H0,75/10
	wire end ferrule	Stripping length	nominal 12 mm
		Recommended wire-end ferrule	H1,0/16 GE SV
		Stripping length	nominal 10 mm
		Recommended wire-end ferrule	H1,0/10
	wire end ferrule	Stripping length	nominal 10 mm
		Recommended wire-end ferrule	H1,5/10
Reference text	The outside diameter of the plastic collar should not be larger than the pitch (P), Length of ferrules is to be chosen depending on the product and the rated voltage.		

B2CF 3.50/36/180F SN BK BX

Weidmüller Interface GmbH & Co. KG
Klingenbergstraße 26
D-32758 Detmold
Germany

www.weidmueller.com

Technical data

Rated data acc. to IEC

tested acc. to standard	IEC 60664-1, IEC 61984	Rated current, min. number of poles (Tu=20°C)	13.4 A
Rated current, max. number of poles (Tu=20°C)	10 A	Rated current, min. number of poles (Tu=40°C)	12 A
Rated current, max. number of poles (Tu=40°C)	9 A	Rated voltage for surge voltage class / pollution degree II/2	320 V
Rated voltage for surge voltage class / pollution degree III/2	160 V	Rated voltage for surge voltage class / pollution degree III/3	160 V
Rated impulse voltage for surge voltage class/ pollution degree II/2	2.5 kV	Rated impulse voltage for surge voltage class/ pollution degree III/2	2.5 kV
Rated impulse voltage for surge voltage class/ contamination degree III/3	2.5 kV	Short-time withstand current resistance	3 x 1s with 80 A

Rated data acc. to CSA

Institute (CSA)	CSA	Certificate No. (CSA)	200039-1121690
Rated voltage (Use group B / CSA)	300 V	Rated voltage (Use group C / CSA)	50 V
Rated voltage (Use group D / CSA)	300 V	Rated current (Use group B / CSA)	9.5 A
Rated current (Use group C / CSA)	9.5 A	Rated current (Use group D / CSA)	9.5 A
Wire cross-section, AWG, min.	AWG 30	Wire cross-section, AWG, max.	AWG 16
Reference to approval values	Specifications are maximum values, details - see approval certificate.		

Rated data acc. to UL 1059

Institute (cURus)	CURUS	Certificate No. (cURus)	E60693
Rated voltage (Use group B / UL 1059)	300 V	Rated voltage (Use group C / UL 1059)	50 V
Rated voltage (Use group D / UL 1059)	300 V	Rated current (Use group B / UL 1059)	9.5 A
Rated current (Use group C / UL 1059)	9.5 A	Rated current (Use group D / UL 1059)	9.5 A
Wire cross-section, AWG, min.	AWG 30	Wire cross-section, AWG, max.	AWG 16
Reference to approval values	Specifications are maximum values, details - see approval certificate.		

Packing

Packaging	Box	VPE length	349.00 mm
VPE width	135.00 mm	VPE height	40.00 mm

Type tests

Test: Durability of markings	Standard	IEC 61984 section 6.2 and 7.3.2 / 10.11 taking pattern from IEC 60068-2-70 / 12.95
	Test	mark of origin, type identification, pitch, type of material, date clock, approval marking UL, approval marking cULus
	Evaluation	available
	Test	durability
	Evaluation	passed
Test: Misengagement (Non-interchangeability)	Standard	IEC 61984 section 6.3 and 6.9.1 / 10.11, IEC 60512-13-5 / 02.06
	Test	180° turned without coding elements
	Evaluation	passed
	Test	180° turned with coding elements
	Evaluation	passed
	Test	visual examination
	Evaluation	passed

B2CF 3.50/36/180F SN BK BX

Weidmüller Interface GmbH & Co. KG
Klingenbergstraße 26
D-32758 Detmold
Germany

www.weidmueller.com

Technical data

Test: Clampable cross section	Standard	IEC 60999-1 section 7 and 9.1 / 11.99, IEC 60947-1 section 8.2.4.5.1 / 03.11	
	Conductor type	Type of conductor and conductor cross-section	solid 0.14 mm²
		Type of conductor and conductor cross-section	stranded 0.14 mm²
		Type of conductor and conductor cross-section	solid 1.5 mm²
		Type of conductor and conductor cross-section	stranded 1.5 mm²
		Type of conductor and conductor cross-section	AWG 26/1
		Type of conductor and conductor cross-section	AWG 26/19
		Type of conductor and conductor cross-section	AWG 16/1
		Type of conductor and conductor cross-section	AWG 16/19
	Evaluation	passed	
Test for damage to and accidental loosening of conductors	Standard	IEC 60999-1 section 9.4 / 11.99	
	Requirement	0.2 kg	
	Conductor type	Type of conductor and conductor cross-section	AWG 26/1
		Type of conductor and conductor cross-section	AWG 26/19
	Evaluation	passed	
	Requirement	0.3 kg	
	Conductor type	Type of conductor and conductor cross-section	H05V-U0.75
		Type of conductor and conductor cross-section	H05V-K0.75
	Evaluation	passed	
	Requirement	0.4 kg	
	Conductor type	Type of conductor and conductor cross-section	H07V-U1.5
		Type of conductor and conductor cross-section	H07V-K1.5
		Type of conductor and conductor cross-section	AWG 16/1
		Type of conductor and conductor cross-section	AWG 16/19
	Evaluation	passed	
Pull-out test	Standard	IEC 60999-1 section 9.5 / 11.99	
	Requirement	≥10 N	
	Conductor type	Type of conductor and conductor cross-section	AWG 26/1

B2CF 3.50/36/180F SN BK BX

Weidmüller Interface GmbH & Co. KG
Klingenbergstraße 26
D-32758 Detmold
Germany

www.weidmueller.com

Technical data

	Type of conductor and conductor cross-section	AWG 26/19
Evaluation	passed	
Requirement	≥20 N	
Conductor type	Type of conductor and conductor cross-section	H05V-U0.75
	Type of conductor and conductor cross-section	H05V-K0.75
Evaluation	passed	
Requirement	≥40 N	
Conductor type	Type of conductor and conductor cross-section	H07V-U1.5
	Type of conductor and conductor cross-section	H07V-K1.5
	Type of conductor and conductor cross-section	AWG 16/1
	Type of conductor and conductor cross-section	AWG 16/19
Evaluation	passed	

Important note

IPC conformity	Conformity: The products are developed, manufactured and delivered according international recognized standards and norms and comply with the assured properties in the data sheet resp. fulfill decorative properties in accordance with IPC-A-610 "Class 2". Further claims on the products can be evaluated on request.
Notes	• Additional variants on request • Gold-plated contact surfaces on request • Rated current related to rated cross-section & min. No. of poles. • Crimp shape A for wire-end ferrules with crimping tools PZ 1,5 (order no. 9005990000) or PZ 6/5 (order no. 9011460000) for larger wire cross-sections recommended. • P on drawing = pitch • Rated data refer only to the component itself. Clearance and creepage distances to other components are to be designed in accordance with the relevant application standards. • Max. outer diameter of the conductor 2.6 mm • In accordance with IEC 61984, OMNIMATE-connectors are connectors without breaking capacity (COC). During designated use, connectors are not allowed to be engaged or disengaged when live or under load • Long term storage of the product with average temperature of 50 °C and maximum humidity 70%, 36 months

Classifications

ETIM 6.0	EC002638	ETIM 7.0	EC002638
ETIM 8.0	EC002638	ETIM 9.0	EC002638
ETIM 10.0	EC002638	ECLASS 9.0	27-44-03-09
ECLASS 9.1	27-44-03-09	ECLASS 10.0	27-44-03-09
ECLASS 11.0	27-46-02-02	ECLASS 12.0	27-46-02-02
ECLASS 13.0	27-46-02-02	ECLASS 14.0	27-46-02-02
ECLASS 15.0	27-46-02-02		

B2CF 3.50/36/180F SN BK BX

Weidmüller Interface GmbH & Co. KG
Klingenbergstraße 26
D-32758 Detmold
Germany

www.weidmueller.com

Drawings

Product image

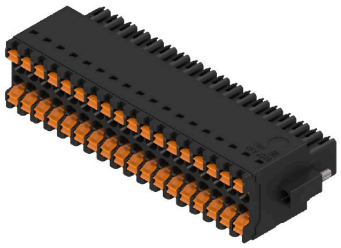

Dimensional drawing

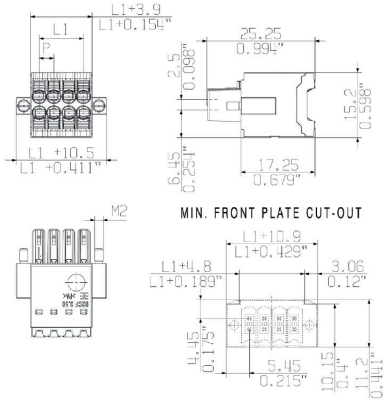

Graph

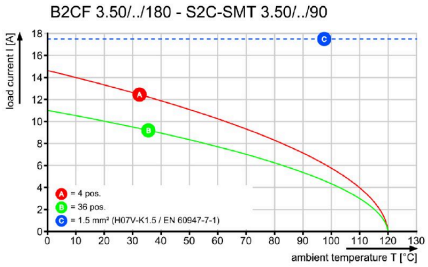

Product benefits



Solid PUSH IN contactSafe and durable

B2CF 3.50/36/180F SN BK BX

Weidmüller Interface GmbH & Co. KG
Klingenbergstraße 26
D-32758 Detmold
Germany

www.weidmueller.com

Drawings

Product benefits

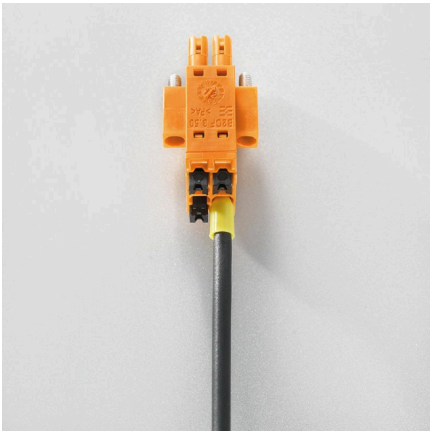

Large connection cross-sectionUp to 1.5 mm possible with ease

Product benefits



Fast PUSH IN connectionTool-free and touch-safe

Example of use

