ITT

Interconnect Solutions

Audio XL





Engineered for life

Cannon, VEAM, BIW

A Historical Achievement of Technology Leadership

Defining and Championing Innovation

Showcasing a portfolio of creativity, ITT's "Engineered For Life" execution embraces products which have become ubiquitous in a broad collection of markets including: Military/Aerospace, Civil Aircraft, Industrial Instrumentation, Medical, Oil & Gas, Energy, Transportation, Telecom/Handset, Computer, Consumer, and Automotive.

ITT's rich interconnect history embraces contributions to both technological breakthroughs and social movements. With one of the industry's broadest product offerings, ITT's interconnect products have supported:

- Every Free World space mission, bringing the universe to our doorstep.
- Motion picture, radio, and television equipment, serving laughter and entertainment to millions.
- Commercial and military communications systems, linking the voices of the world.
- Computerized tools, reshaping the information highway.
- Aircraft, rapid transit, and automobiles, mobilizing our expanding society.
- Oil and natural gas production, powering the world's economies.
- Agricultural equipment, attacking the roots of world hunger.



ITT

ITT Interconnect Solutions

ITT Interconnect Solutions is a division of the multi-national ITT Corporation, a $7.8 billion dollar global enterprise representing the brands Cannon, VEAM, and BIW. Our connector portfolio remains the most extensive in the industry offering the most reliable and cost effective range of interconnect solutions. These innovations have enabled ITT to provide products and technologies to such markets as:

- Automotive
- Computer/Consumer
- Industrial/Instrumentation
- Military/Aerospace
- Oil Fields
- Telecom/Handset
- Transportation

When you specify a Cannon, VEAM or BIW connector, you can rely on a product designed, developed, and manufactured to the highest quality and reliability standards. This tradition of excellence is based on ITT' s corporate culture of operating its businesses under the principles of Six Sigma. At ITT, Six Sigma is not just a quality philosophy but a complete corporate culture that drives the entire business. Our Value Based Management and Value Based Product Development systems are two cornerstones that allow for the development of both leadership and product engineering principles, ensuring the correct industry leading products are developed to the accepted market driven lead times. These principles have allowed ITT to become the market leader in all of our business portfolios.

Six Sigma Manufacturing

ITT operates manufacturing facilities in the United States, Germany, Italy, Mexico, China, Japan and the UK, all of which have particular product area strengths allowing ITT to offer a truly global footprint to our customers. Our facilities are world class and accommodate full vertical integration utilizing the latest manufacturing technologies including: automated and robotic machining centers, Super Market manufacturing cells, Kanban pull systems, and automated electrical, mechanical, and optical test and inspection equipment. The combination of our manufacturing strength and our advanced manufacturing facilities allows ITT to offer products at market driven prices. Our capabilities, especially in robotics, computerized precision tooling, Kaizen Project Management, Six Sigma tools, and testing, give ITT the most optimized global manufacturing footprint in the interconnect industry.

The Custom Difference

As the industry leader in harsh environment interconnect applications, ITT' s world class engineering teams will work directly with our customers to design and develop cost effective solutions for their applications. In many cases we may modify one of our standard designs to ensure a highly reliable solution where timing is critical. Yet, in those cases where a complete custom interconnect solution is required, ITT will work with our customer' s Engineers to design an interconnect solution which will be cost effective yet highly reliable. As professional consultants, our Engineering teams will provide a thorough systems and mechanical analysis of any proposed solution. These analyses provide our customers with sophisticated electrical signal and mechanical characterizations to determine the best solution for their application.

RoHS Compliance Information

ITT has implemented a strict parts control plan for all ITT electronics plants worldwide that allows the Cannon, VEAM, and BIW connector product portfolios to meet the requirements of European Union Directive 2002/95/EC better know as the Reduction of Hazardous Substances initiative. As appropriate, specific Cannon, VEAM, and BIW products may be ordered with an R prefix number which insures our customers will receive RoHS compliant parts for their commercial electronics applications and equipment. Since most RoHS hazardous substances center around specific metal plating and lead solder coatings, ITT's products for RoHS compliance are available in the following plating finishes: electroless nickel, stainless steel, Anodize over aluminum and Gold plating. It should be noted that gold plating would be recommended as the replacement for tin-lead solder when ordering board mount connectors.

In today's audio markets, demanding customers have many choices. Why choose ITT Interconnect Solutions?

Cannon pioneered the first Audio connectors during the early 1920's, the birth of the entertainment industry. Continuing our innovation in these markets, Cannon has moved beyond these early products into today's digital age. Cannon's expertise stems from a commitment to the entertainment industry, a commitment extending longer than any other supplier. Cannon's audio product line offers a broad spectrum of choices encompassing low cost products for less demanding applications to higher-end connectors for applications requiring extra durability.



First introduced by Cannon in 1958, the overwhelming industry acceptance of our XLR connectors culminated in the recent induction into the TECnology Hall of Fame by the Mix Foundation for Excellence in Audio, further symbolizing our instrumental participation in the advancement of audio technology. This recognition substantiates Cannon's XLR as the industries leading audio connector.



In addition to the XLR, global audio and video professionals specify our XLM-PCB connectors. These connectors display such high reliability that they are also preferred by such industries as military, medical, test/instrumentation, transportation, and industrial.

Today, we proudly introduce our new Mini-XL series designed to meet the audio industries demands for a higher density, robust interconnect solutions. The Mini-XL connector represents a 40% reduction in size over our standard XLR connector. This quick, one touch connect/disconnect circular connector incorporates a design optimized for a wide variety of applications where space is a premium. Be assured, all of our audio connectors are RoHS compliant.

Moving back to our original question, which company's audio connectors have invented the standard since audience's first marveled at the first "talking" motion pictures? Audio professionals know the answer. ITT ICS Cannon continues to own center stage with audio products that have served laughter and entertainment to millions.

XL Series Quick Reference Selection Guide

	XLR Plug	XLR Receptacle	XLM-PCB Receptacle	Mini-XL Plug	Mini-XL Receptacle
					
Number of Contacts	2 to 7	2 to 7	3	3 to 6	3 to 6
Rated Current	5A to 15A	5A to 15A	3A	3A	3A
Rated Voltage (AC)	2 Pin 200V 3-7 pin 133V	2 Pin 200V 3-7 pin 133V	133V	125V	125V
Dielectric Withstanding Voltage (AC)	2 pin 1600V 3-7 pin 1400V	2 pin 1600V 3-7 pin 1400V	1,400V	250V	250V
Insulation Resistance	5,000mΩ min at 500 VDC				
Contact Resistance	2-4 pins 5mΩ max 5-7 pins 10mΩ max	2-4 pins 5mΩ max 5-7 pins 10mΩ max	PCS: 20mΩ max PCV: 30mΩ max PCH: 50mΩ max	30mΩ max	30mΩ max
Durability Cycles	500 Cycles				
Operating Temperature	-35° C ~ +125° C		-35° C ~ +85° C		
Wire Accommodation Reference AWG (Max)	2-3 pin #14 4 pin #16 5-6 pin #18 7 pin #20	-	-	#24	-
Wire Cross Section (Max)	2-3 pin 2.1mm^2 4 pin 1.3mm^2 5-6 pin 0.8mm^2 7 pin 0.5mm^2	-	-	0.2mm^2	-
Contact Material/Finish	Copper/Silver Optional Gold Plating	Copper/Silver Optional Gold Plating	Copper/Silver Optional Gold Plating	Copper/Gold	Copper/Gold
Body Material/Finish	Aluminum/ Satin Nickel	Aluminum/ Satin Nickel	Zinc/Nickel	Copper/Nickel	Copper/Nickel
Packaging	10 pieces per bag	10 pieces per tray	25 pieces per tray	50 pieces per box	Male Flange: 100 pcs per box Female Flange: 50 pcs per tray
RoHS	Yes	Yes	Yes	Yes	Yes
Page Number	9	9-11	18-19	23-24	25

XLR, and XLM-PCB are all intermatable but can not be mated with our Mini-XL Series.

Table of Contents

XL Series

XL-Series Quick Reference Selection Guide 5

XLR

High grade professional use audio and other low level circuit applications. Two to seven position plugs and receptacles featuring shock absorbing resilient rubber insulator and light weight aluminum shell.

General Performance 7
Part Number Selection Guide 8
Plugs and Receptacles 9-11
Bulkhead Adapters 11
Dust Caps 12
Small Bushing 12
Pin/Socket Insert Assemblies 12
Assembly Instructions 13-14
Panel Cutouts and PCB Layouts 15

XLM-PCB

Three position PCB mount receptacles with metal shell for improved EMI shielding, nylon insulator, PCB retention feature and separate ground contact.

General Performance 16
Part Number Selection Guide 17
Male and Female Flange Receptacles. 18-19
Panel Cutouts 120

Mini-XL Series NEW

Mini XL

Three to six position plugs and receptacles that are 40% smaller in size and weight than our standard XLR connector.

General Performance 21
Part Number Selection Guide 22
Plugs and Receptacles 23-25
Assembly Instructions 26-27
Panel Cutouts 28

Part Number Index

Part Number Cross Reference Index and Package Quantity Guide 29-32

Glossary of Terms 33

Product Safety Information 34

ITT

XLR Series General Performance Characteristics

ITT's broad range of XLR connectors are extensively used in a wide variety of audio OEM applications.

The XLR Series features a quick disconnect latch lock along with a rugged design to withstand extended field use. Available in configurations of 2 and 7 positions, our plugs and receptacles offer precision, machined contacts, shock-absorbing rubber insulators, and lightweight aluminum shells. All XLR connectors are RoHS Compliant.



First introduced in 1958, these connectors have been so instrumental in the advancement of audio technology that our XL series was inducted into the TECnology Hall of Fame in 2007. Today our connectors continue to lead the way into the digital revolution.

Applications

- **Amplifiers**
- **Equalizers**
- **Mixers**
- **Medical Electronics**
- **Recording Equipment**
- **Test Instruments**
- **Industrial Control Devices**
- **Microphones**
- **TV Cameras**

Product Features and Benefits

- Rugged design to withstand extreme field use
- Resilient socket insulator which minimizes vibration and electrical noise
- Quick disconnect latch lock
- Low reflectivity satin finish
- Interchangeable and intermateable with XLB-PCB and XLM-PCB

Performance Specifications

Temperature Rating	–35°C to +125°C	Insulation Resistance	5,000MΩ min at 500 VDC
Number of Contacts	2 to 7	Contact Resistance	5m Ω Max to 10m Ω Max
Rated Current	5A to 15A	Durability Cycles	500 Mating Cycles
Rated Voltage(AC)	133V to 200V	Wire Accommodation Reference AWG (Max)	#14 to #20
Dielectric Withstanding Voltage (AC)	1,400V to 1,600 V	Wire Cross Selection (Max)	0.5mm to 2.1mm

Materials and Finishes

Description	Material	Finish/Treatment
Contacts	Copper Alloy	Silver or Gold
Insulator	Socket- Chloroprene Pin- Nylon	-
Shell	Aluminum Alloy*	Satin Nickel
Barrel	Steel	Nickel
Bushing	Chloroprene	-
Latch Lever	Steel	Nickel

* For adapters XLR-3-11-11-F/XLR-3-12-12-F the material is brass

Dimensions shown in mm (inch)
Specifications and dimensions subject to change

www.ittcannon.com

XLR Part Number Selection Guide

XLR — 3 — 11C — ** — F

- XLR — SERIES PREFIX
- 3 — CONTACT ARRANGEMENTS
- 11C — SHELL STYLES
- ** — MODIFICATIONS
- F — SUFFIX

CONNECTOR SERIES
XLR

CONTACT ARRANGEMENTS
See below 2A, 3, 4, 5, 6, 6A, 7

SHELL STYLE
11C - Female Plug
12C - Male Plug
13 - Female Round Flange Receptacle
14 - Male Round Flange Receptacle
31 - Female Rectangular Flange Receptacle
32 - Male Rectangular Flange Receptacle

MODIFICATIONS
F77 - Rectangular Small Flange (Receptacle 31 and 32)
F512 - Rectangular Mini-Flange (Receptacle 32 only)
A176 - Gold plated contacts (for 2-6 pins)
* 7 pins are gold plated contacts as standard,-A176 not necessary
**Black shell available, contact factory

SUFFIX
P/N's XLR-3-11-11, XLR-3-12-12 assigned for Bulkhead Adapters only
"F" to identify lead free products.
XLR series products are RoHS compliant.

XLR Series							
Number of Contacts	2	3	4	5	6		7
	2A	3	4	5	6	6A	7
Contact Arrangement Configuration (Engaging View Pin Insert)							
Wire AWG Max	#14	#14	#16	#18	#18	#18	#20
Wire Cross Section Max	2.1mm²	2.1mm²	1.3mm²	0.8mm²	0.8mm²	0.8mm²	0.5mm²

Series Variations

Series/Shell Styles		Contact Arrangement						
		2A	3	4	5	6	6A	7
XLR	11C	★	★	★	★	★	★	★
	12C	★	★	★	★	★	★	★
	13	★	★	★	★	★	★	★
	14	★	★	★	★	★	★	★
	31	★	★	★	★	★	★	★
	32	★	★	★	★	★	★	★
	31-F77	★	★	★	★	★	★	★
	32-F77	★	★	★	★	★	★	★
	32-F512	★	★	★	★	★	★	★

Shell Styles

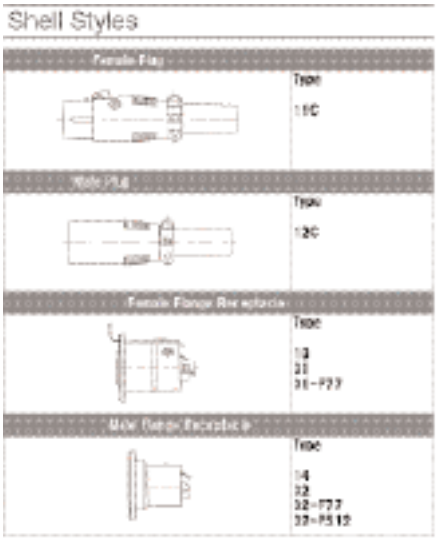

Dimensions shown in mm (inch)
Specifications and dimensions subject to change

XLR Plugs

Female Plug

XLR-*-11C



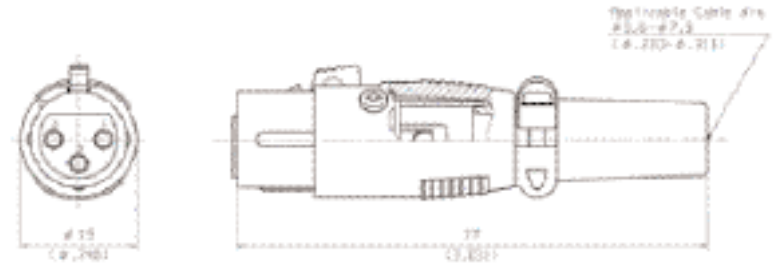

See page 13 for assembly instructions

Male Plug

XLR-*-12C



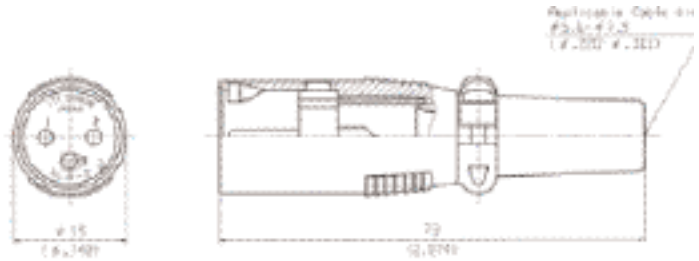

See page 13 for assembly instructions

Receptacles

Female Round Flange Receptacle

XLR-*-13





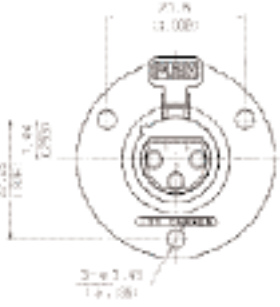

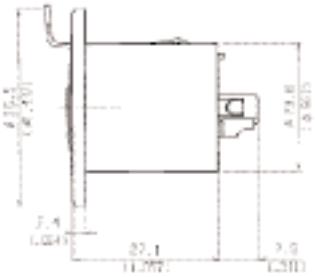

See page 15 for panel cutouts.
See Page 22 for latch lever assembly/removal insructions.

Male Round Flange Receptacle

XLR-*-14





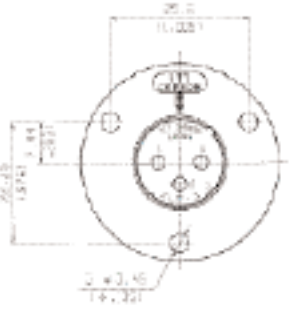

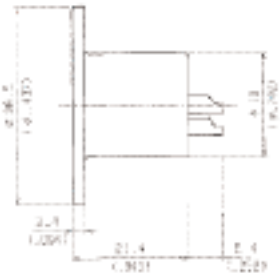

See page 15 for panel cutouts.

Dimensions shown in mm (inch)
Specifications and dimensions subject to change

Female Rectangular Flange Receptacle

XLR-*-31





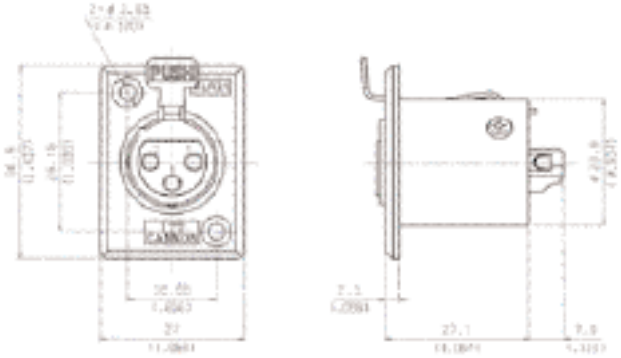

See page 15 for panel cutouts.
See page 22 for latch lever assembly/removal instructions.

Male Rectangular Flange Receptacle

XLR-*-32





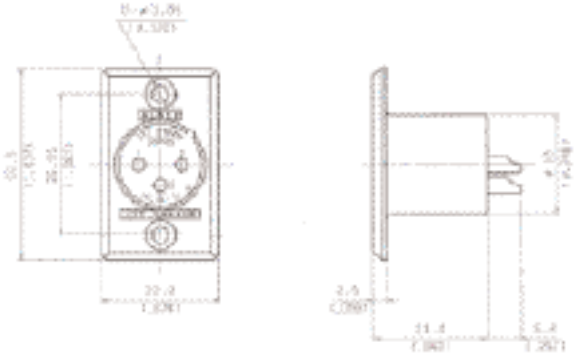

See page 15 for panel cutouts.

Female Rectangular Small Flange Receptacle

XLR-*-31-F77





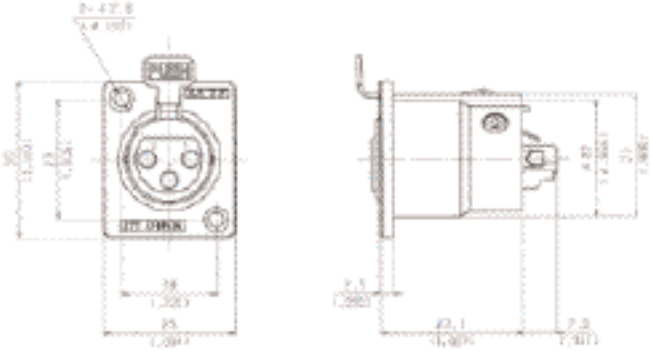

See page 15 for panel cutouts.
See page 22 for latch lever assembly/removal instructions.

Male Rectangular Small Flange Receptacle

XLR-*-32-F77





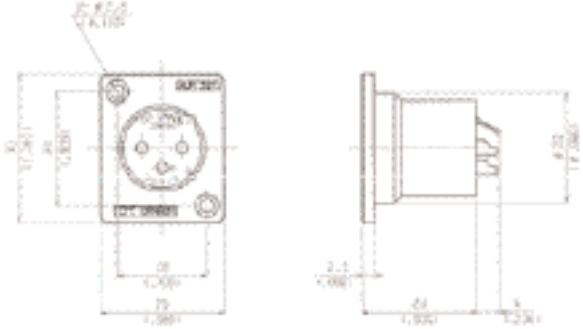

See page 15 for panel cutouts.

ITT

Dimensions shown in mm (inch)
Specifications and dimensions subject to change

XLR Receptacles and Bulkhead Adapters

Male Rectangular Mini Flange Receptacle

XLR- *-32-F512



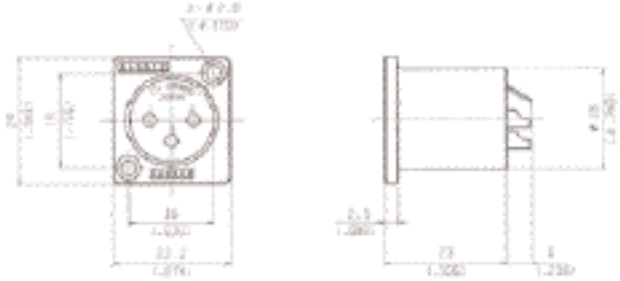

See page 15 for panel cutouts.

Bulkhead Adapters

Female-Female Bulkhead

XLR-3-11-11-F



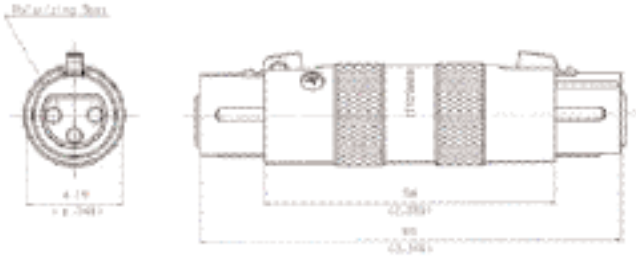

Male-Male Bulkhead

XLR-3-12-12-F



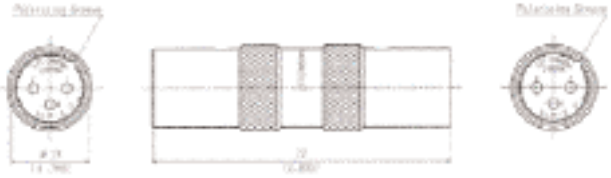

Dimensions shown in mm (inch)
Specifications and dimensions subject to change

Dust Caps

	Plastic	Metallic (Brass)	For use with (Shell Styles)
Female Cap	 XLR-SDC (M01) 127007-0284	 XLR-13RC 127007-0244	11C 13 31 31-F77
Male Cap	 XLR-PDC (M01) 127007-0283	 XLR-14PC 127007-0243	12C 14 32 32-F77 32-F512

Small Bushing F502



012-4504-000

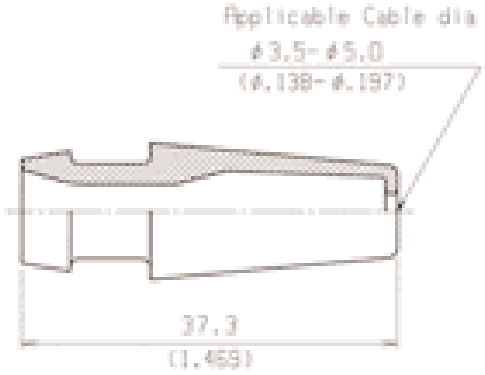

Note: Small bushing is available separately . Standard bushing is supplied with plug.

Pin/Socket Insert Assembly



XLR-3-Socket Insert Assembly
127007-0051

Contact factory for other pin configurations.



XLR-3-Pin Insert Assembly
127007-0115

ITT

Dimensions shown in mm (inch)
Specifications and dimensions subject to change



Strip Dimensions

Number of Contacts	A mm (inch)	B mm (inch)
2,3	6.0~7.0(.236~.276)	15mm (.591)
4	5.0~6.0 (.197~.236)	15mm (.591)
5,6	4.5~5.5 (.177~.217)	15mm (.591)
7	2.5~3.5 (.098~.138)	15mm (.591)

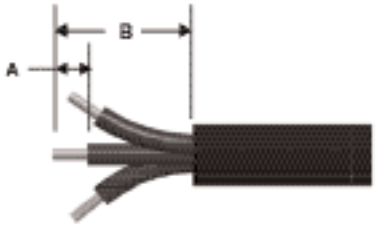

First, strip the wire to dimension, as shown.



Insert bushing into shell.



Slide shell assembly and insulator tube onto cable.



Preparing Insert Assembly; Solder individual center conductors to each contact. Visually inspect solder joints before proceeding.

Dimensions shown in mm (inch)
Specifications and dimensions subject to change



Supporting the insert assembly in one hand, slide the insulator tube and shell assembly into position, as shown.





Once assembled, fasten shell assembly with screw and washer. Please make sure to use washer with screw.



Finally, screw clamp onto the shell assembly to lock cable into position. Please take extra precaution to orientate clamp into its proper position. The inside chamfer with the largest diameter must butt against the shell assembly. Perform a light pull test and visually inspect finished assembly.



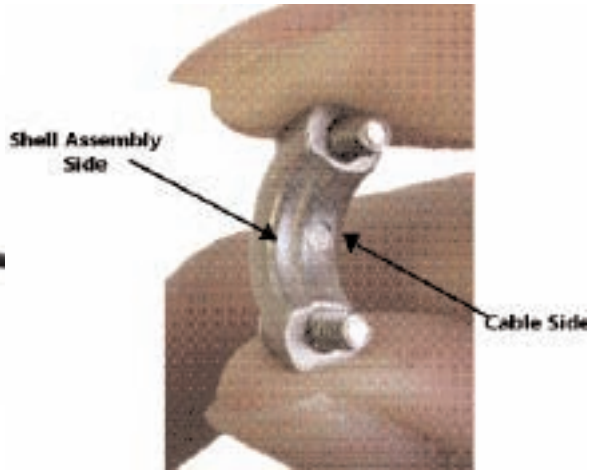

XLR Panel Cutouts

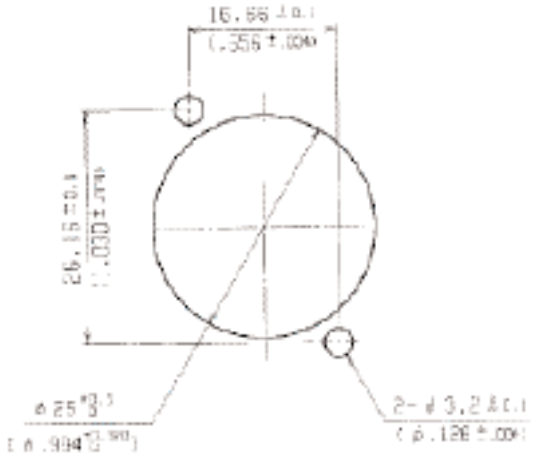

XLR-∗-31

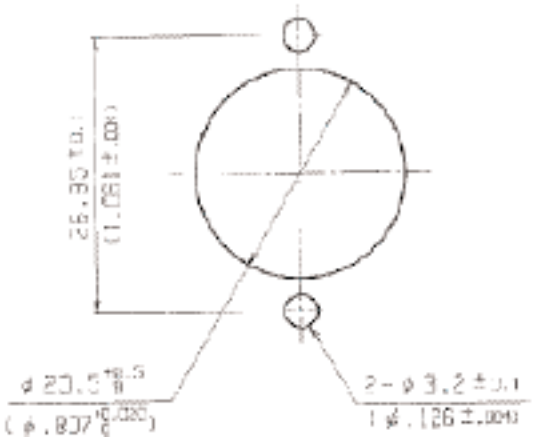

XLR-∗-32

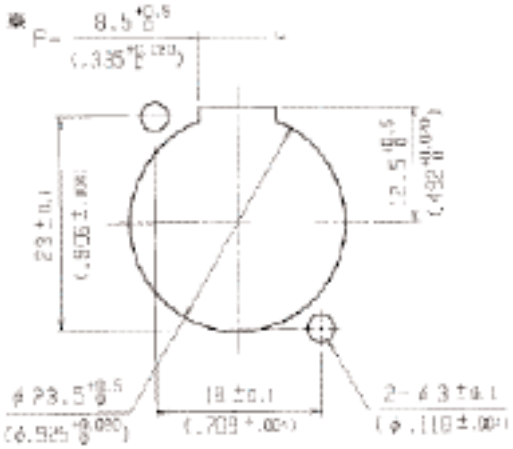

XLR-∗-31/32-F77

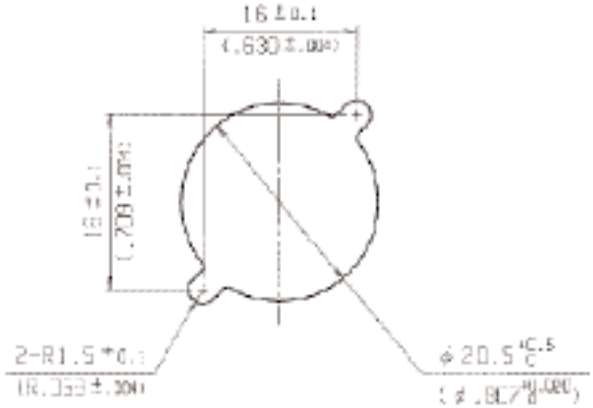

XLR-∗-32-F512

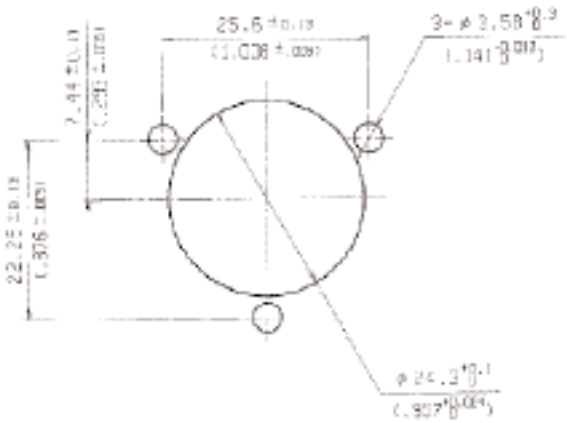

XLR-∗-13

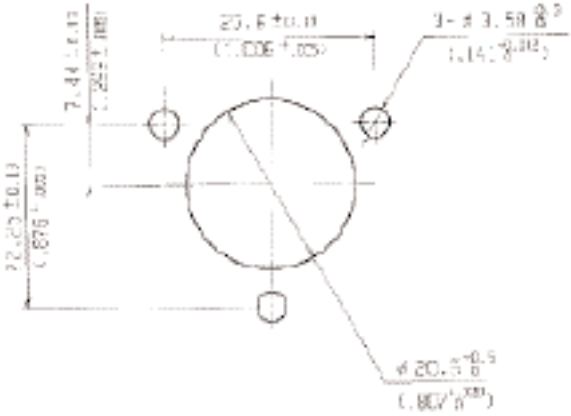

XLR-∗-14

Dimensions shown in mm (inch)
Specifications and dimensions subject to change

XLM- Printed Circuit Board Series General Performance Characteristics

ITT's XLM male and female PCB metal flange mount receptacles offer durability, reliability, space savings and greatly improved EMI shielding over our plastic XLB-PCB connectors. Ease of installation is enhanced since the grounding terminal can be used to temporarily fasten the connector to the circuit board during assembly. The XLM-PCB connectors are interchangeable and intermateable with our XLR series. All XLM-PCB connectors are RoHS Compliant.



Applications

- **Amplifiers**
- **Equalizers**
- **Mixers**
- **Medical Electronics**
- **Recording Equipment**
- **Test Instruments**
- **Industrial Control Devices**
- **Microphones**
- **TV Cameras**

Product Features and Benefits

- PCB mount type with metal shell and barrel made as one piece
- Nylon or PBT insulator (UL94V-O)
- Improved EMI Shielding
- Space saving (smaller flange)
- Snap-in PCB retention feature
- Separate ground contact
- Quick disconnect latch lock
- Interchangeable and Intermateable with XLR Series

Performance Specifications

Temperature Rating	–35°C to +85°C
Number of Contacts	3
Rated Current	3A
Rated Voltage(AC)	133V
Dielectric Withstanding Voltage (AC)	1,400V

Insulation Resistance	5,000MΩ min at 500 VDC
Durability Cycles	500 Mating Cycles
Contact Resistance	PCS: 20mΩmax
	PCV: 30mΩmax
	PCH: 50mΩmax

Materials and Finishes

Description	Material	Finish/Treatment
Female Contacts	Copper Alloy	Silver or Gold
Male Contacts	Copper Alloy	Silver or Gold
Insulator	Nylon or PBT	-
Shell/Barrel	Zinc Alloy	Nickel
Grounding Lug	Copper Alloy	Tin
Latch Lever	Steel	Nickel

XLM-PCB Part Number Selection Guide

XLM — 3 — 31 PCS ** — F

- SERIES PREFIX
- CONTACT ARRANGEMENTS
- SHELL STYLES
- TERMINATION FOR PCB
- MODIFICATIONS
- SUFFIX

CONNECTOR SERIES
XLM

CONTACT ARRANGEMENTS
See below 3 pins only

SHELL STYLE
31 - Female Rectangular Flange Receptacle
32 - Male Rectangular Flange Receptacle

TERMINATION FOR PCB
PCS - Straight Termination
PCV - Vertical 90° Termination
PCH-L - Horizontal Left Side Termination (rear view)
PCH-R - Horizontal Right Side Termination (rear view)

MODIFICATIONS
A176 - Gold plated contacts (for 3 pins)

SUFFIX
“F” to identify lead free products
XLM series products are RoHS compliant

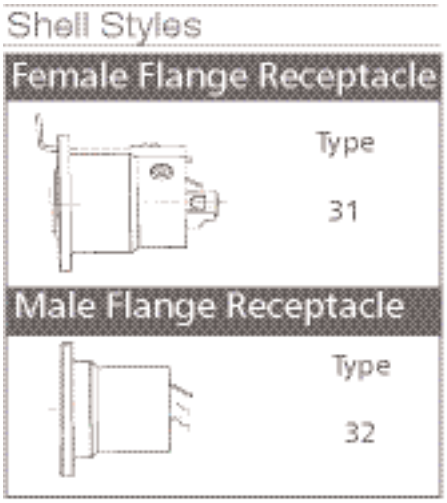

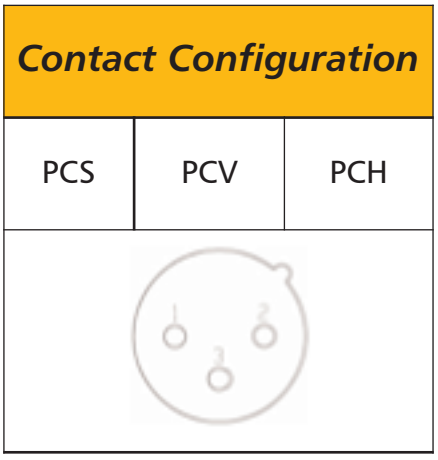

Dimensions shown in mm (inch)
Specifications and dimensions subject to change

XLM-PCB Female Flange Receptacles

Straight Termination

XLM-3-31PCS-F



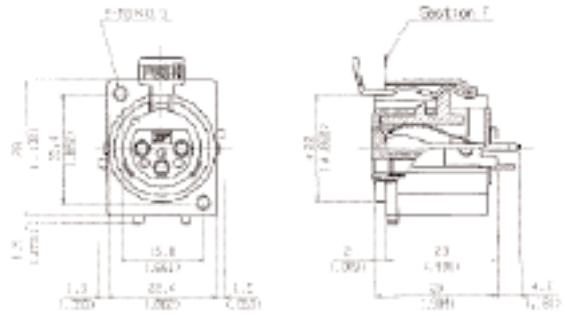

See page 27 for panel cutouts and PCB Layouts.
See page 22 for latch lever assembly/removal instructions.

Vertical 90° Termination

XLM-3-31-PCV-F



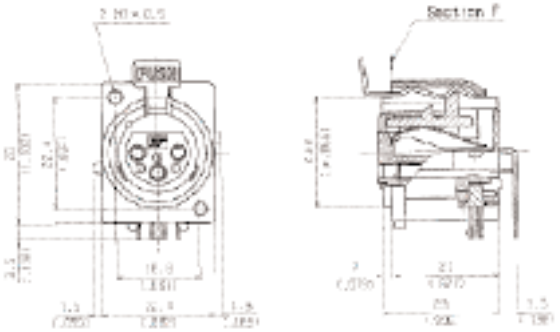

See page 27 for panel cutouts and PCB Layouts.
See page 22 for latch lever assembly/removal instructions.

Horizontal Left Side Termination

XLM-3-31PCH-L-F

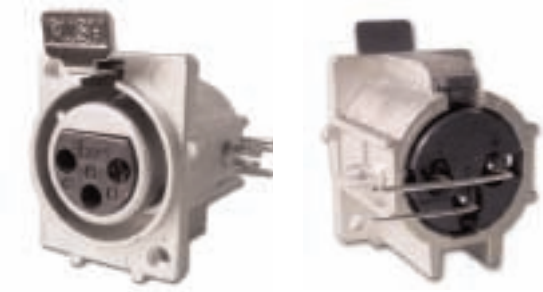

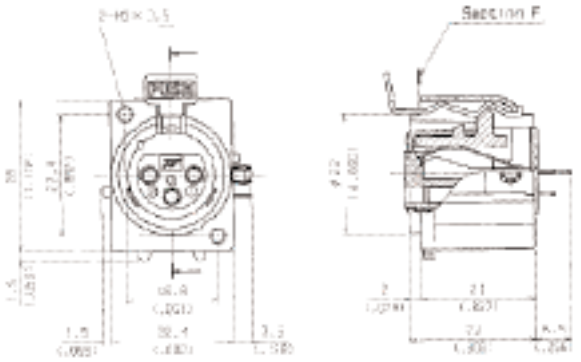

See page 27 for panel cutouts and PCB Layouts.
See page 22 for latch lever assembly/removal instructions.

Horizontal Right Side Termination

XLM-3-31PCH-R-F



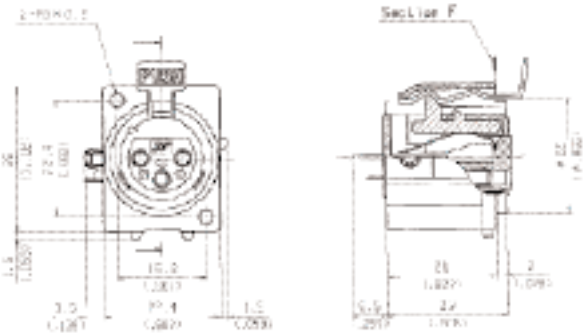

See page 27 for panel cutouts and PCB Layouts.
See page 22 for latch lever assembly/removal instructions.

Note: Section F referenced on line drawing refers to position of flange front face.

XLM-PCB Male Flange Receptacles

Straight Termination

XLM-3-32PCS-F





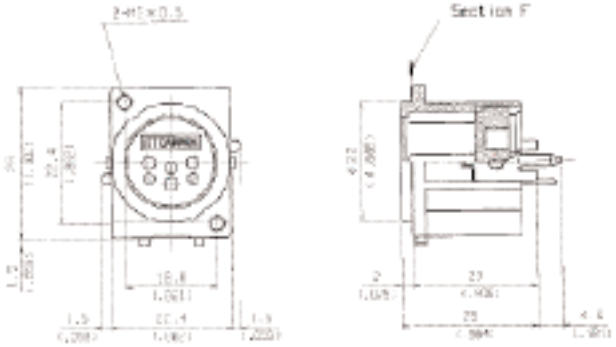

See page 27 for panel cutouts and PCB Layouts.

Vertical 90° Termination

XLM-3-32-PCV-F





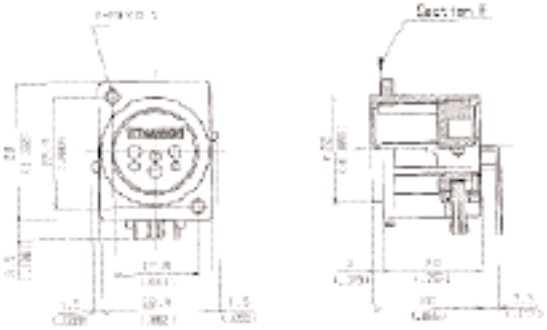

See page 27 for panel cutouts and PCB Layouts.

Horizontal Left Side Termination

XLM-3-32PCH-L-F





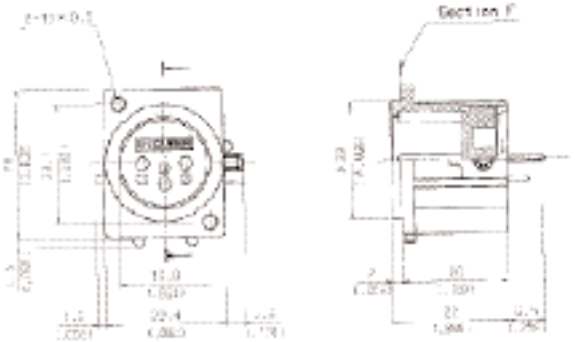

See page 27 for panel cutouts and PCB Layouts.

Horizontal Right Side Termination

XLM-3-32PCH-R-F





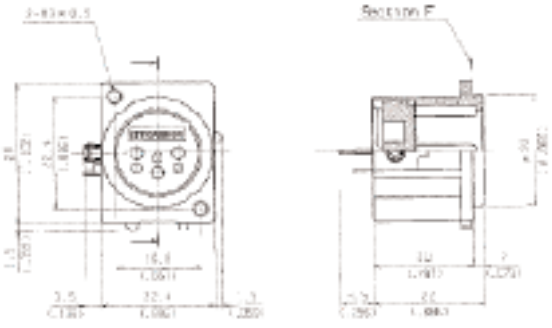

Note: Section F referenced on line drawing refers to position of flange front face.

See page 27 for panel cutouts and PCB Layouts.

Dimensions shown in mm (inch)
Specifications and dimensions subject to change

XLM-PCB Panel Cutouts

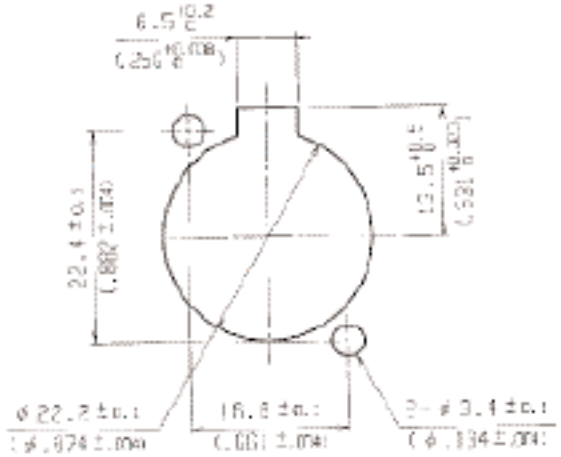

XLM-3-31PCS-F/-PCV-F/-PCH-L or R-F

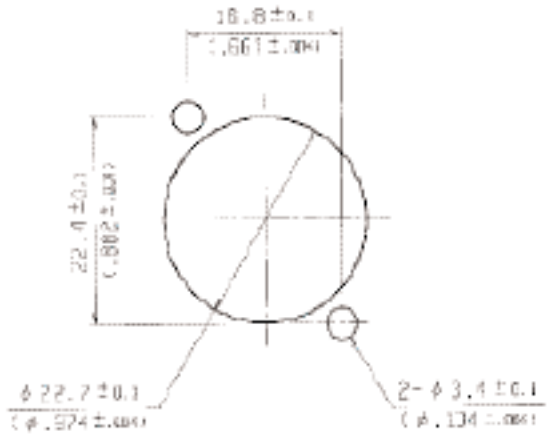

XLM-3-32PCS-F/-PCV-F/-PCH-L or R-F

Printed Circuit Board Hole Patterns (Ref.)

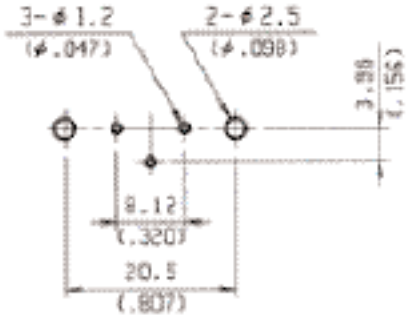

XLM-3-31/32PCS-F

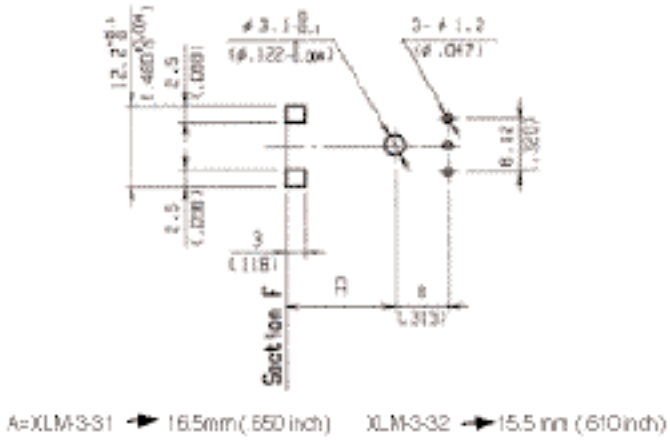

XLM-3-31/32PCV-F

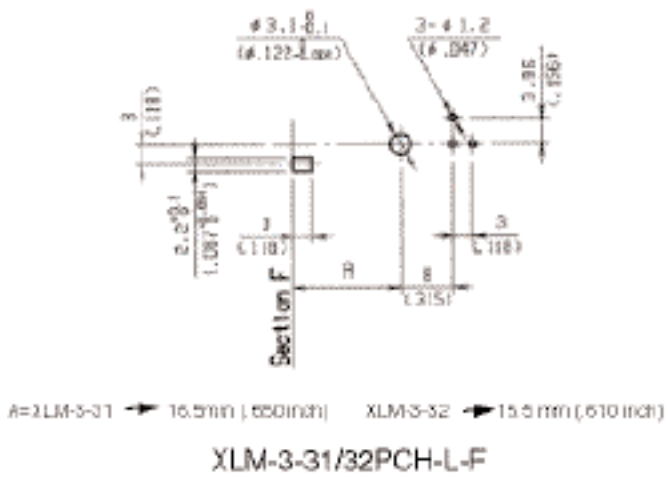

XLM-3-31/32PCH-L-F

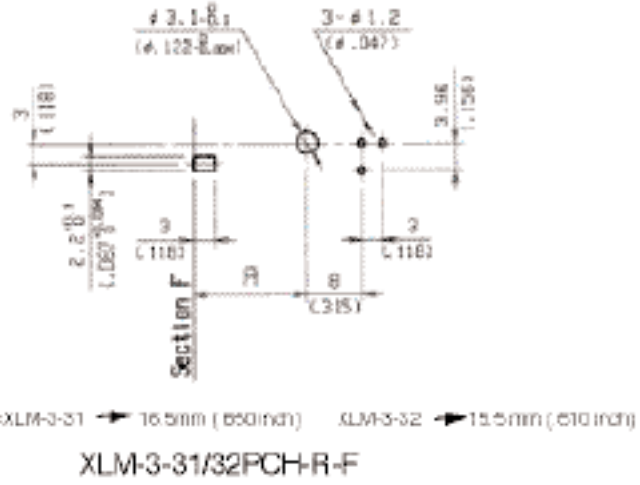

XLM-3-31/32PCH-R-F

Note: See page 22 for Latch Lever installation and removal instructions.

Mini-XL General Performance Characteristics

The world's most sophisticated video, broadcast, and recording equipment require audio connector solutions with high reliability, unparallel performance, and robust durability. ITT Cannon is pleased to introduce the Mini-XL audio connector series. The Mini-XL connector is **40% smaller** than the industries standard XLR connector. Intended to meet the demands for high density compact audio applications, this quick one touch connect/disconnect circular connector is designed to withstand extreme field use. All Mini-XL connects are RoHS compliant.



Applications

- **Amplifiers**
- **Equalizers**
- **Mixers**
- **Medical Electronics**
- **Recording Equipment**
- **Test Instruments**
- **Industrial Control Devices**
- **Microphones**
- **TV Cameras**

Product Features and Benefits

- Rugged design to withstand extreme field use
- Resilient socket insulator which minimizes vibration and electrical noise
- Quick disconnect latch lock
- Low reflectivity satin finish
- 40% smaller than standard XLR
- Ideal for high density applications
- Contacts are gold plated

Performance Specifications

Temperature Rating	–35°C to +85°C
Number of Contacts	3 to 6
Rated Current	3A
Rated Voltage(AC)	125V
Dielectric Withstanding Voltage (AC)	250V

Insulation Resistance	5,000MΩ min at 500 VDC
Durability Cycles	500 Mating Cycles
Contact Resistance	30mΩmax
Wire Accommodation Reference AWG (Max)	#24
Wire Cross Selection (Max)	0.2mm

Materials and Finishes

Description	Material	Finish/Treatment
Contacts	Copper Alloy	Gold
Insulator	PPS	-
Shell	Copper Alloy	Nickel
Barrel	Copper Alloy	Nickel
Bushing	Thermo-plastic Vulcanizates	-
Latch Lever	Steel	Nickel

Dimensions shown in mm (inch)
Specifications and dimensions subject to change

Mini-XL Part Number Selection Guide

M-XL — 3 — 11 *

- SERIES PREFIX
- CONTACT ARRANGEMENTS
- SHELL STYLES
- CAP VARIATION

CONNECTOR SERIES
Mini-XL

NUMBER OF CONTACTS
See Below 3,4,5,6

SHELL STYLE
11 - Female Plug
12 - Male Plug
14 - Male Round Flange Receptacle
31 - Female Rectangular Flange Receptacle

CAP VARIATION
S - Small Cap with Bushing (Standard)
L - Large Cap
M - Metal Cap

Mini-XL series products are RoHS compliant

Shell Styles

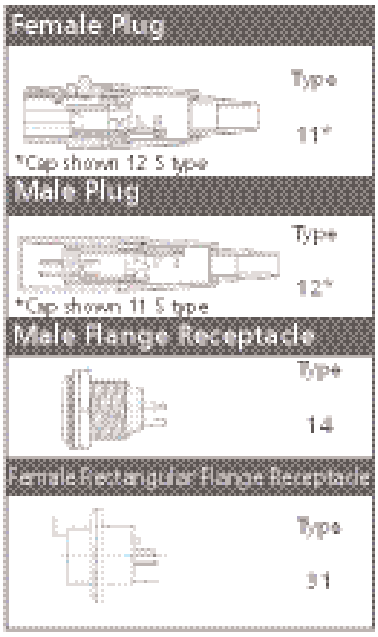

Series Variations

Series/Shell Styles		Contact Arrangements 3	4	5	6
Mini-XL	11	★	★	★	★
	12	★	★	★	★
	14	★	★	★	★
	31	★	★	★	★

Contact Configuration

Number of Contacts	3	4	5	6
Contact Arrangements				
Wire AWG Max	#24	#24	#24	#24
Wire Cross Section Max	0.2mm^2	0.2mm^2	0.2mm^2	0.2mm^2

Mini-XL connects are not intermatable with standard XLR, XLB-PCB, XLM-PCB connectors.

ITT

Dimensions shown in mm (inch)
Specifications and dimensions subject to change

Small Cap with Bushing (Standard)

M-XL- ∗ - 11S



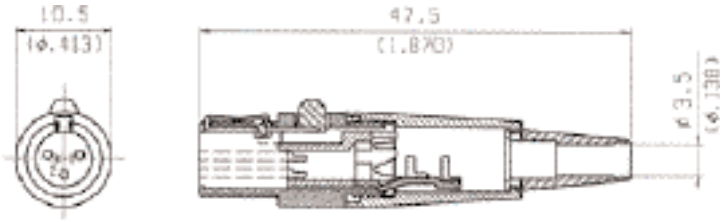

See page 33 for assembly instructions

Large Cap

M-XL- ∗ - 11L



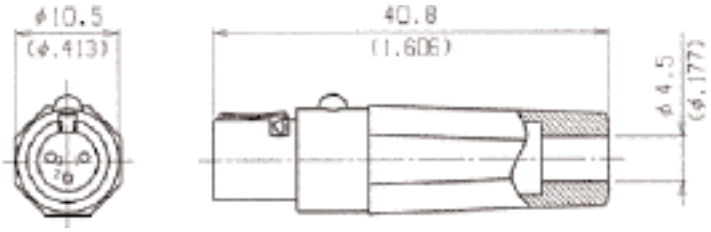

See page 33 for assembly instructions

Metal Cap

M-XL- ∗ - 11M



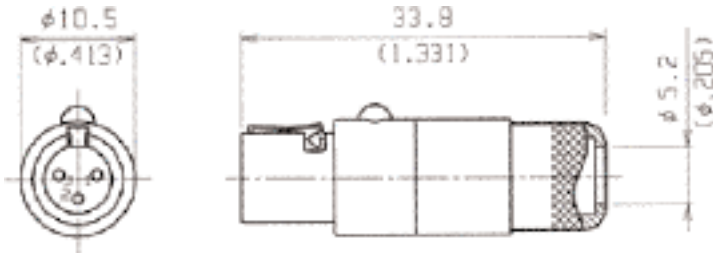

See page 33 for assembly instructions

Dimensions shown in mm (inch)
Specifications and dimensions subject to change

Mini-XL Male Plug

Small Cap with Bushing (Standard)

M-XL- ∗ - 12S



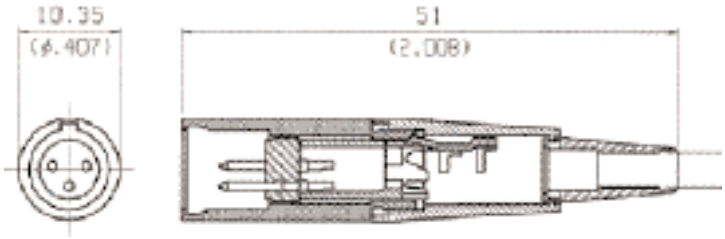

See page 33 for assembly instructions

Large Cap

M-XL- ∗ - 12L



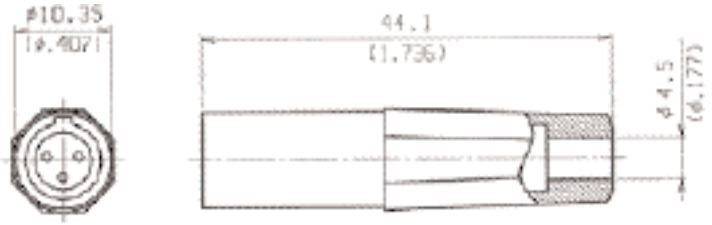

See page 33 for assembly instructions

Metal Cap

M-XL- ∗ - 12M



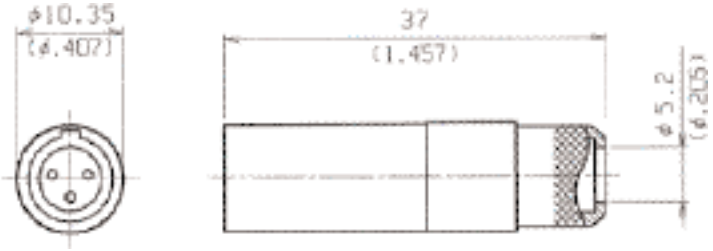

See page 33 for assembly instructions

Male Round Flange Receptacle

M-XL- ∗ - 14



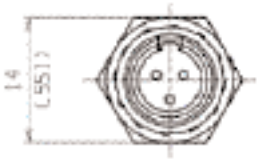

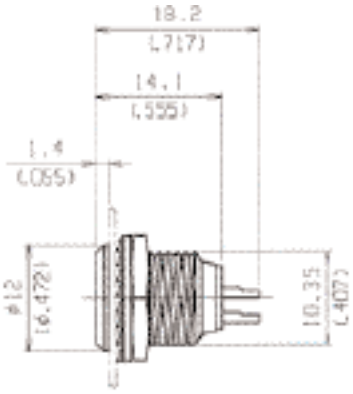

See page 35 for panel cutouts.

Female Rectangular Flange Receptacle

M-XL- ∗ - 31



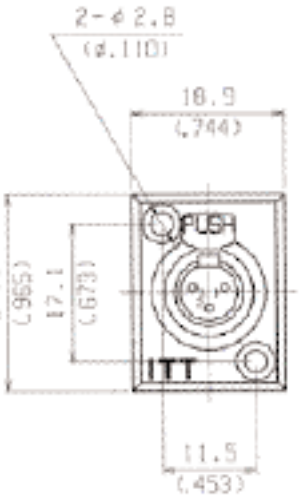

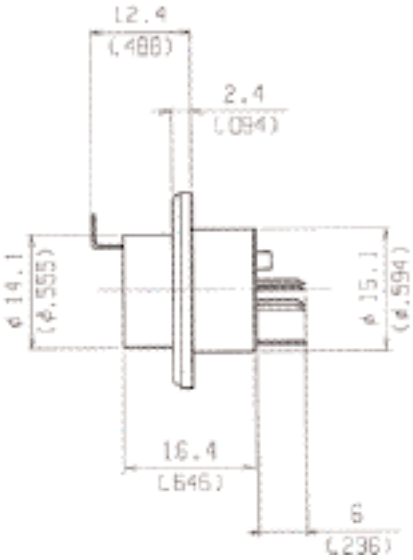

See page 35 for panel cutouts.

Note: Latch Lever is not removable.



Slide cap with bushing and cable strain relief onto cable, as shown.



Strip Dimensions

Number of Contacts	A mm (inch)	B mm (inch)
3,4,5,6	2.0—3.0 (.079-.118)	15mm (.591)

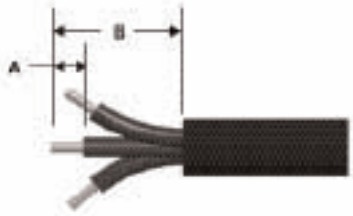

Strip wire to dimension shown.

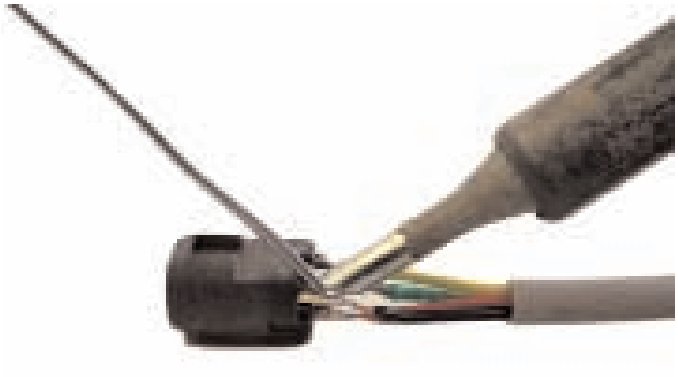

Preparing Insert Assembly; Solder individual center conductors to each contact. Visually inspect solder joints before proceeding.



Supporting the insert assembly in one hand, slide cable strain relief into insert assembly. Please take extra precaution to orientate the two components together. Keying features has been added to ensure both components latch together properly. Crimp tabs located in rear of strain relief onto cable as shown.

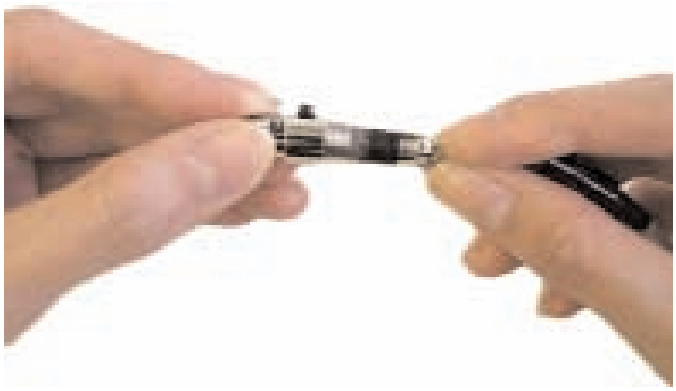

Insert complete sub-assembly into front barrel of connector. Please take extra precaution to orientate the barrel and sub-assembly during insertion. Keying feature has been added to ensure both components are positioned properly during this step.



Slide cap with bushing up to terminated connector housing. Note: Large and metal caps do not include bushing as shown.



Rotate cap clockwise to thread onto connector housing to complete assembly. Perform a light pull test and visually inspect the finished assembly.

Mini-XL Panel Cutouts

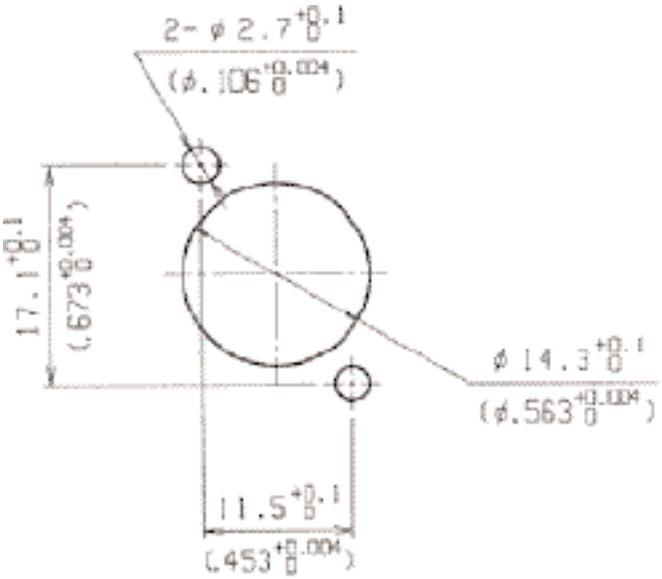

M-XL-* -31
Front

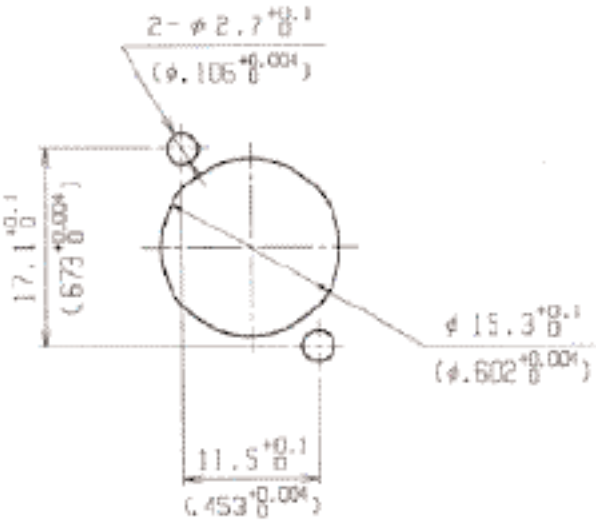

M-XL-* -31
Rear

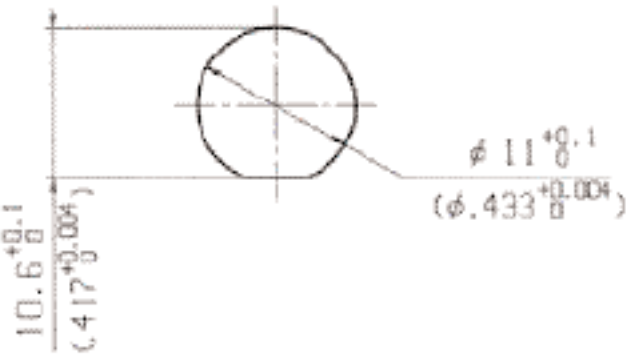

M-XL-* -14

Part Number Cross Reference

ITT Part Number	Part Number Designator Guide	# of Contacts	Description	Configuration	Package Quantity	Page
127008-0278	XLM-3-31PCH-L-F	3	XLM Female Flange Receptacle	Horizontal Left Side Termination	25	25
127008-0280	XLM-3-31PCH-R-A176-F	3	XLM Female Flange Receptacle	Horizontal Right Side Termination w/gold contacts	25	25
127008-0279	XLM-3-31PCH-R-F	3	XLM Female Flange Receptacle	Horizontal Right Side Termination	25	25
127008-0275	XLM-3-31PCS-A176-F	3	XLM Female Flange Receptacle	Straight Termination w/gold contacts	25	25
127008-0274	XLM-3-31PCS-F	3	XLM Female Flange Receptacle	Straight Termination	25	25
127008-0277	XLM-3-31PCV-A176-F	3	XLM Female Flange Receptacle	Vertical 90° Termination w/gold contacts	25	25
127008-0276	XLM-3-31PCV-F	3	XLM Female Flange Receptacle	Vertical 90° Termination	25	25
127008-0286	XLM-3-32PCH-L-A176-F	3	XLM Male Flange Receptacle	Horizontal Left Side Termination w/gold contacts	25	26
127008-0285	XLM-3-32PCH-L-F	3	XLM Male Flange Receptacle	Horizontal Left Side Termination	25	26
127008-0288	XLM-3-32PCH-R-A176-F	3	XLM Male Flange Receptacle	Horizontal Right Side Termination w/gold contacts	25	26
127008-0287	XLM-3-32PCH-R-F	3	XLM Male Flange Receptacle	Horizontal Right Side Termination	25	26
127008-0282	XLM-3-32PCS-A176-F	3	XLM Male Flange Receptacle	Straight Termination w/gold contacts	25	26
127008-0281	XLM-3-32PCS-F	3	XLM Male Flange Receptacle	Straight Termination	25	26
127008-0284	XLM-3-32PCV-A176-F	3	XLM Male Flange Receptacle	Vertical 90° Termination w/gold contacts	25	26
127008-0283	XLM-3-32PCV-F	3	XLM Male Flange Receptacle	Vertical 90° Termination	25	26
127007-0244	XLR-13RC	n/a	XLR Metallic Female Dust Cap	For use with shell sizes (11C,13,31,31-F77)	10	12
127007-0243	XLR-14PC	n/a	XLR Metallic Male Dust Cap	For use with shell sizes (12C,14,32,32-F77,32-F512)	10	12
127007-0284	XLR-SDC (M01)	n/a	XLR Plastic Female Dust Cap	For use with shell sizes (11C,13,31,31-F77)	10	12
127007-0283	XLR-PDC(M01)	n/a	XLR Plastic Male Dust Cap	For use with shell sizes (12C,14,32,32-F77,32-F512)	10	12
012-4504-000	F502	n/a	XLR Small Bushing Accessory	Straight	100	12
127007-0128	XLR-2A-11C	2	XLR Female Plug	Straight	10	9
127007-0136	XLR-2A-12C	2	XLR Male Plug	Straight	10	9
127007-0124	XLR-2A-13	2	XLR Female Receptacle	Round Flange w/latch	10	9
127007-0122	XLR-2A-14	2	XLR XLR Male Receptacle	Round Flange w/latch	10	9
127007-0133	XLR-2A-31	2	XLR Female Receptacle	Rectangular Flange w/latch	10	10
127007-0095	XLR-2A-31-F77	2	XLR Female Receptacle	Rectangular Small Flange w/latch	10	10
127007-0155	XLR-2A-32	2	XLR Male Receptacle	Rectangular Flange	10	10
127007-0111	XLR-2A-32-F512	2	XLR Male Receptacle	Rectangular Mini-Flange	10	11
127007-0107	XLR-2A-32-F77	2	XLR Male Receptacle	Rectangular Small Flange	10	10

Part Number Cross Reference

ITT Part Number	Part Number Designator Guide	# of Contacts	Description	Configuration	Package Quantity	Page
127007-0115	XLR-3 PIN INST ASSY	3	XLR Male Insert Assembly	Straight	10	12
127007-0051	XLR-3 SKT INST ASSY	3	XLR Female Socket Insert Assembly	Straight	10	12
127007-0366	XLR-3-11-11-F	3	XLR Female-Female Bulkhead Adapter	Straight	10	11
127007-0058	XLR-3-11-C	3	XLR Female Plug	Straight	10	9
127007-0214	XLR-3-11C-A176	3	XLR Female Plug	Straight w/ gold contacts	10	9
127007-0367	XLR-3-12-12-F	3	XLR Male-Male Bulkhead Adapter	Straight	10	11
127007-0103	XLR-3-12C	3	XLR Male Plug	Straight	10	9
127007-0215	XLR-3-12C-A176	3	XLR Male Plug	Straight w/ gold contacts	10	9
127007-0099	XLR-3-13	3	XLR Female Receptacle	Round Flange w/latch	10	9
127007-0153	XLR-3-14	3	XLR Male Receptacle	Round Flange w/latch	10	9
127007-0104	XLR-3-31	3	XLR Female Receptacle	Rectangular Flange w/latch	10	10
127007-0211	XLR-3-31-A176	3	XLR Female Receptacle	Rectangular Flange w/latch w/gold contacts	10	10
127007-0085	XLR-3-31-F77	3	XLR Female Receptacle	Rectangular Small Flange w/latch	10	10
127007-0105	XLR-3-32	3	XLR Male Receptacle	Rectangular Flange	10	10
127007-0212	XLR-3-32-A176	3	XLR Male Receptacle	Rectangular Flange w/gold contacts	10	10
127007-0040	XLR-3-32-F512	3	XLR Male Receptacle	Rectangular Mini-Flange	10	11
127007-0086	XLR-3-32-F77	3	XLR Male Receptacle	Rectangular Small Flange	10	10
127007-0282	XLR-3-A176 PIN INST ASSY	3	XLR Male Insert Assembly	Straight w/gold contacts	10	12
127007-0194	XLR-4 SKT INST ASSY	4	XLR Female Socket Insert Assembly	Straight	10	*
127007-0087	XLR-4-11C	4	XLR Female Plug	Straight	10	9
127007-0065	XLR-4-12C	4	XLR Male Plug	Straight	10	9
127007-0348	XLR-4-12C-A176	4	XLR Male Plug	Straight w/gold contacts	10	9
127007-0125	XLR-4-13	4	XLR Female Receptacle	Round Flange w/latch	10	9
127007-0168	XLR-4-14	4	XLR Male Receptacle	Round Flange w/latch	10	9
127007-0100	XLR-4-31	4	XLR Female Receptacle	Rectangular Flange w/latch	10	10
127007-0210	XLR-4-31-A176	4	XLR Female Receptacle	Rectangular Flange w/latch w/gold contacts	10	10
127007-0064	XLR-4-31-F77	4	XLR Female Receptacle	Rectangular Small Flange w/latch	10	10
127007-0101	XLR-4-32	4	XLR Male Receptacle	Rectangular Flange	10	10
127007-0204	XLR-4-32-F512	4	XLR Male Receptacle	Rectangular Mini-Flange	10	11
127007-0102	XLR-4-32-F77	4	XLR Male Receptacle	Rectangular Small Flange	10	10
127007-0195	XLR-5-SKT INST ASSY	5	XLR Female Insert	Straight	10	n/a
127007-0129	XLR-5-11C	5	XLR Female Plug	Straight	10	9
127007-0052	XLR-5-12C	5	XLR Male Plug	Straight	10	9
127007-0202	XLR-5-13	5	XLR Female Receptacle	Round Flange w/latch	10	9
127007-0169	XLR-5-14	5	XLR Male Receptacle	Round Flange w/latch	10	9
127007-0134	XLR-5-31	5	XLR Female Receptacle	Rectangular Flange w/latch	10	10
127007-0053	XLR-5-31-F77	5	XLR Female Receptacle	Rectangular Small Flange w/latch	10	10
127007-0156	XLR-5-32	5	XLR Male Receptacle	Rectangular Flange	10	10

*Contact Factory for drawings

Part Number Cross Reference

ITT Part Number	Part Number Designator Guide	# of Contacts	Description	Configuration	Package Quantity	Page
127007-0127	XLR-5-32-F512	5	XLR Male Receptacle	Rectangular Mini-Flange	10	11
127007-0106	XLR-5-32-F77	5	XLR Male Receptacle	Rectangular Small Flange	10	10
127007-0130	XLR-6-11C	6	XLR Female Plug	Straight	10	9
127007-0137	XLR-6-12C	6	XLR Male Plug	Straight	10	9
127007-0201	XLR-6-13	6	XLR Female Receptacle	Round Flange w/latch	10	9
127007-0170	XLR-6-14	6	XLR Male Receptacle	Round Flange w/latch	10	9
127007-0163	XLR-6-31	6	XLR Female Receptacle	Rectangular Flange w/latch	10	10
127007-0092	XLR-6-31-F77	6	XLR Female Receptacle	Rectangular Small Flange w/latch	10	10
127007-0157	XLR-6-32	6	XLR Male Receptacle	Rectangular Flange	10	10
127007-0206	XLR-6-32-F512	6	XLR Male Receptacle	Rectangular Mini-Flange	10	11
127007-0164	XLR-6-32-F77	6	XLR Male Receptacle	Rectangular Small Flange	10	10
127007-0131	XLR-6A-11C	6	XLR Female Plug	Straight	10	9
127007-0138	XLR-6A-12C	6	XLR Male Plug	Straight	10	9
127007-0198	XLR-6A-13	6	XLR Female Receptacle	Round Flange w/latch	10	9
127007-0171	XLR-6A-14	6	XLR Male Receptacle	Round Flange w/latch	10	9
127007-0176	XLR-6A-31	6	XLR Female Receptacle	Rectangular Flange w/latch	10	10
127007-0342	XLR-6A-31-A176	6	XLR Female Receptacle	Rectangular Flange w/latch w/gold contacts	10	10
127007-0094	XLR-6A-31-F77	6	XLR Female Receptacle	Rectangular Small Flange w/latch	10	10
127007-0159	XLR-6A-32	6	XLR Male Receptacle	Rectangular Flange	10	10
127007-0205	XLR-6A-32-F512	6	XLR Male Receptacle	Rectangular Mini-Flange	10	11
127007-0197	XLR-6A-32-F77	6	XLR Male Receptacle	Rectangular Small Flange	10	10
127007-0123	XLR-7-11C	7	XLR Female Plug	Straight w/gold contacts	10	9
127007-0097	XLR-7-12C	7	XLR Male Plug	Straight w/gold contacts	10	9
127007-0166	XLR-7-13	7	XLR Female Receptacle	Round Flange w/latch w/gold contacts	10	9
127007-0132	XLR-7-14	7	XLR Male Receptacle	Round Flange w/latch w/gold contacts	10	9
127007-0135	XLR-7-31	7	XLR Female Receptacle	Rectangular Flange w/latch w/gold contacts	10	10
127007-0096	XLR-7-31-F77	7	XLR Female Receptacle	Rectangular Small Flange w/latch w/gold contacts	10	10
127007-0158	XLR-7-32	7	XLR Male Receptacle	Rectangular Flange w/gold contacts	10	10
127007-0112	XLR-7-32-F512	7	XLR Male Receptacle	Rectangular Mini-Flange w/gold contacts	10	11
127007-0165	XLR-7-32-F77	7	XLR Male Receptacle	Rectangular Small Flange w/gold contacts	10	10
127010-0003	M-XL-3-11S	3	Mini-XL Female Plug w/small cap and bushing	Straight	50	30
127010-0007	M-XL-3-11L	3	Mini-XL Female Plug w/large cap	Straight	50	30
127010-0011	M-XL-3-11M	3	Mini-XL Female Plug w/metal cap	Straight	50	30
127010-0015	M-XL-3-12S	3	Mini-XL Male Plug w/small cap and bushing	Straight	50	31
127010-0019	M-XL-3-12L	3	Mini-XL Male Plug w/large cap	Straight	50	31
127010-0023	M-XL-3-12M	3	Mini-XL Male Plug w/metal cap	Straight	50	31
127010-0027	M-XL-3-14	3	Mini-XL Male Receptacle	Round Flange	50	32
127010-0031	M-XL-3-31	3	Mini-XL Female Receptacle	Rectangular Flange w/latch	50	32
127010-0004	M-XL-4-11S	4	Mini-XL Female Plug w/small cap and bushing	Straight	50	30
127010-0008	M-XL-4-11L	4	Mini-XL Female Plug w/large cap	Straight	50	30
127010-0012	M-XL-4-11M	4	Mini-XL Female Plug w/metal cap	Straight	50	30

Part Number Cross Reference

ITT Part Number	Part Number Designator Guide	# of Contacts	Description	Configuration	Package Quantity	Page
127010-0016	M-XL-4-12S	4	Mini-XL Male Plug w/small cap and bushing	Straight	50	31
127010-0020	M-XL-4-12L	4	Mini-XL Male Plug w/large cap	Straight	50	31
127010-0024	M-XL-4-12M	4	Mini-XL Male Plug w/metal cap	Straight	50	31
127010-0028	M-XL-4-14	4	Mini-XL Male Receptacle	Round Flange	100	32
127010-0032	M-XL-4-31	4	Mini-XL Female Receptacle	Rectangular Flange w/latch	50	32
127010-0005	M-XL-5-11S	5	Mini-XL Female Plug w/small cap and bushing	Straight	50	30
127010-0009	M-XL-5-11L	5	Mini-XL Female Plug w/large cap	Straight	50	30
127010-0013	M-XL-5-11M	5	Mini-XL Female Plug w/metal cap	Straight	50	30
127010-0017	M-XL-5-12S	5	Mini-XL Male Plug w/small cap and bushing	Straight	50	31
127010-0021	M-XL-5-12L	5	Mini-XL Male Plug w/large cap	Straight	50	31
127010-0025	M-XL-5-12M	5	Mini-XL Male Plug w/metal cap	Straight	50	31
127010-0029	M-XL-5-14	5	Mini-XL Male Receptacle	Round Flange	100	32
127010-0033	M-XL-5-31	5	Mini-XL Female Receptacle	Rectangular Flange w/latch	50	32
127010-0006	M-XL-6-11S	6	Mini-XL Female Plug w/small cap and bushing	Straight	50	30
127010-0010	M-XL-6-11L	6	Mini-XL Female Plug w/large cap	Straight	50	30
127010-0014	M-XL-6-11M	6	Mini-XL Female Plug w/metal cap	Straight	50	30
127010-0018	M-XL-6-12S	6	Mini-XL Male Plug w/small cap and bushing	Straight	50	31
127010-0022	M-XL-6-12L	6	Mini-XL Male Plug w/large cap	Straight	50	31
127010-0026	M-XL-6-12M	6	Mini-XL Male Plug w/metal cap	Straight	50	31
127010-0030	M-XL-6-14	6	Mini-XL Male Receptacle	Round Flange	100	32
127010-0034	M-XL-6-31	6	Mini-XL Female Receptacle	Rectangular Flange w/latch	50	32

Glossary of Terms

AMP: (Ampere) Unit of electrical current.

Amplifier: A device which increases the amplitude of a signal.

AWG: (American Wiring Gauge) A U.S. measurement standard of the diameter of non-ferrous wire, which includes copper and aluminum. As a AWG number increases the diameter of the wire decreases.

Balanced Audio: A type of audio signal which uses two inverted voltages as a way to prevent unwanted noise being picked up by cables.

Bus: The pathway along which an electrical signal flows. For example, the output of a sound mixer is referred to as the master stereo bus.

Channel: Similar to a bus, a pathway through an audio device. For example, sound mixers have multiple input channels.

Connector Durability: The number of times a connector can be physically mated and still maintain its specified performance.

Contact Resistance: The measurement of the DC electrical resistance between a pair of mated contacts. Usually specified as being measured after a given number of mating cycles.

Decibel (dB): Logarithmic measurement of signal strength. 1/10 of a Bel.

Dielectric Withstanding Voltage (AC): The maximum voltage that a dielectric material can withstand without failure.

Dust Cap: A mechanical device attached to the mating face of an unmated connector to prevent ingress of contaminant's and provide protection against mechanical damage.

Equalization: The process of adjusting various audio frequencies to correct or enhance the sound.

Frequency Response: The sensitivity of an audio device to various frequencies, i.e. the amount each frequency is boosted, attenuated or reproduced.

Gain: The amplification level of an audio signal.

Hertz: Unit of frequency, cycles per second.

Headroom: In a cable or audio device, the difference between the maximum level of the signal being carried and the maximum level the device is capable of carrying without distortion.

Impedance: The amount of opposition a device has to an audio signal. In technical terms, the combined effect of capacitance, inductance, and resistance on a signal.

Insulation Resistance: The electrical resistance between two conductors separated by an insulating medium.

Mini-XL: Similar to XLR series but 40% smaller in size, configurations available from 3 to 6 pins.

Mixer: A device which accepts two or more audio inputs and provides one or more audio outputs.

Operating Temperature: Range of temperature in which output frequency and other electrical and environmental characteristics meet connector specifications.

Peak: The highest level of strength of an audio signal. Often refers to an unacceptably high level, where the signal begins distorting.

Phantom Power: A DC current which is sent through audio cables to provide power for devices such as microphones.

Plug: One half of a mating pair of connectors. The plug interface normally goes outside the jack interface.

Rated Voltage: Maximum voltage that a type of wire, plug, socket or circuit breaker is designed for.

Receptacle: A term used to describe a connector assembly usually bulkhead or PCB mounted.

Stereo: Audio which is made up of two channels — left and right.

Tone: An audio test signal used to adjust levels, test signal quality, identify signal pathways, etc.

Transducer: Any device which converts energy from one form into another. Microphones and loudspeakers are both transducers.

Volume Unit (VU): a unit used to measure the volume of an audio signal.

Wavelength: The length of a wave, measured from any point on a wave to the corresponding point on the next phase of the wave.

XLB-PCB: A lockable printed circuit board receptacle, available with 3 pins. XLB "X series", “L latch” and “B board mount plastic pcb shell”.

XLM-PCB: A lockable printed circuit board receptacle, available with 3 pins. XLM "X series", “L latch” and “M metal pcb shell”.

XLR: A lockable connector, configurations available from 2 to 7 pins. The most common XLR in audio products is the 3-pin XLR. Our original design was the "X series", which later incorporated a latch (L) and then rubber insulation (R), leading to the acronym "XLR".

1. MATERIAL CONTENT AND PHYSICAL FORM
Electrical connectors do not usually contain hazardous materials. They contain conducting and non-conducting materials and can be divided into two groups.
a) Printed circuit types and low cost audio types which employ all plastic insulators and casings.
b) Rugged, Fire Barrier and High Reliability types with metal casings and either natural rubber, synthetic rubber, plastic or glass insulating materials. Contact materials vary with type of connector and also application and are usually manufactured from either: Copper, copper alloys, nickel, alumel, chromel or steel. In special applications, other alloys may be specified.

2. FIRE CHARACTERISTICS AND ELECTRIC SHOCK HAZARD
There is no fire hazard when the connector is correctly wired and used within the specified parameters. Incorrect wiring or assembly of the connector or careless use of metal tools or conductive fluids, or transit damage to any of the component parts may cause electric shock or burns. Live circuits must not be broken by separating mated connectors as this may cause arcing, ionization and burning. Heat dissipation is greater at maximum resistance in a circuit. Hot spots may occur when resistance is raised locally by damage, e.g. cracked or deformed contacts, broken strands of wire. Local overheating may also result from the use of the incorrect application tools or from poor quality soldering or slack screw terminals. Overheating may occur if the ratings in the product Data Sheet/Catalog are exceeded and can cause breakdown of insulation and hence electric shock. If heating is allowed to continue it intensifies by further increasing the local resistance through loss of temper of spring contacts, formation of oxide film on contacts and wires and leakage currents through carbonization of insulation and tracking paths. Fire can then result in the presence of combustible materials and this may release noxious fumes. Overheating may not be visually apparent. Burns may result from touching overheated components.

3. HANDLING
Care must be taken to avoid damage
to any component parts of electrical connectors during installation and use. Although there are normally no sharp edges, care must be taken when handling certain components to avoid injury to fingers. Electrical connectors may be damaged in transit to the customers, and damage may result in creation of hazards. Products should therefore be examined prior to installation/use and rejected if found to be damaged.

4. DISPOSAL
Incineration of certain materials may release noxious or even toxic fumes.

5. APPLICATION
Connectors with exposed contacts should not be selected for use on the current supply side of an electrical circuit, because an electric shock could result from touching exposed contacts on an unmated connector. Voltages in excess of 30 V ac or 42.5 V dc are potentially hazardous and care should be taken to ensure that such voltages cannot be transmitted in any way to exposed metal parts of the connector body. The connector and wiring should be checked, before making live, to have no damage to metal parts or insulators, no solder blobs, loose strands, conducting lubricants, swarf, or any other undesired conducting particles. Circuit resistance and continuity check should be made to make certain that there are no high resistance joints or spurious conducting paths. Always use the correct application tools as specified in the Data Sheet/Catalog. Do not permit untrained personnel to wire, assemble or tamper with connectors. For operation voltage please see appropriate national regulations.

IMPORTANT GENERAL INFORMATION
(i) Air and creepage paths/Operating voltage. The admissible operating voltages depend on the individual applications and the valid national and other applicable safety regulations.
For this reason the air and creepage path data are only reference values. Observe reduction of air and creepage paths due to PC board and/or harnessing.

(ii) Temperature
All information given are temperature limits. The operation temperature depends on the individual application.

(iii) Other important information
Cannon continuously endeavors to improve their products. Therefore, Cannon products may deviate from the description, technical data and shape as shown in this catalog and data sheets.

ITT Interconnect Solutions, a Division of ITT Corporation manufactures the highest quality products available in the marketplace; however these products are intended to be used in accordance with the specifications in this publication. Any use or application that deviates from the stated operating specifications is not recommended and may be unsafe. No information and data contained in this publication shall be construed to create any liability on the part of Cannon. Any new issue of this publication shall automatically invalidate and supersede any and all previous issues.

Product Warranty
A limited warranty applies to Cannon products. In general, except for obligations assumed by Cannon under this warranty, Cannon shall not be liable for any loss, damage, cost of repairs, incidental or consequential damages of any kind, whether or not based on express or implied warranty, contract, negligence or strict liability arising in connection with the design, manufacture, sale, use or repair of the products. Product availability, prices and delivery dates are exclusively subject to our respective order confirmation form; the same applies to orders based on development samples delivered. Please refer to www.ittcannon.com (General Terms of Sale) for the complete text of Cannon's applicable Terms and Conditions, including Warranty.

This publication is not to be construed as an offer. It is intended merely as an invitation to make an offer. By this publication, Cannon does not assume responsibility or any liability for any patent infringements or other rights of third parties which may result from its use.

Reprinting this publication is generally permitted, indicating the source. However, Cannon's prior consent must be obtained in all cases. "Engineered for life" is a registered trademark of ITT Corporation ©2006. All other trademarks or registered trademarks are property of their respective owners. All data subject to change without notice.

This document does not contain technical data whose export is restricted by the Arms Export Control Act (Title 22, U.S.C., App 2401 et. Seq.)



Customer Support Locations

CHINA
Tuopandun Industrial Area, Jinda Cheng,
Xiner Village, Shajing Town,
Baoan District, Shenzhen City,
Guangdong, China 518125
Phone: +86.755.2726.7238
Fax: +86.755.2726.7515

GERMANY
Cannonstrasse 1
Weinstadt, 71384
phone: +49.7151.699.0
fax: +49.7151.699.217

HONG KONG
Units 2405-6, 24/F, ING Tower
308 Des Voeux Road
Central
Hong Kong
phone: +852.2732.2720
fax: +852.2732.2919

ITALY
Corso Europa 41/43
Lainate (MI),
Italy 20020
phone: +39.02938721
fax: +39.0293872300

JAPAN
11-3, 5 Chome, Hibarigaoka, Zama-shi
Kanagawa, Japan 228-0003
phone: +81.462.57.2010
fax: + 82.462.57.1680

UK
Jays Close, Viables Estate
Basingstoke, RG22 4BA
phone: +44.1256.311200
fax: +44.1256.323356

USA
56 Technology Dr.
Irvine, CA 92618
toll free: 1.800.854.3028
phone: 1.714.557.4700
fax: 1.714.628.2142

www.ittcannon.com

©2017 ITT Inc. "Engineered for life" and "Cannon" are registered trademarks of ITT Inc. Specification and other data are based on information available at the time of printing, and are subject to change without notice.

Audio XL 20170721.