WAKEFIELDTHERMAL

HEAT PIPE

Selection Guideline

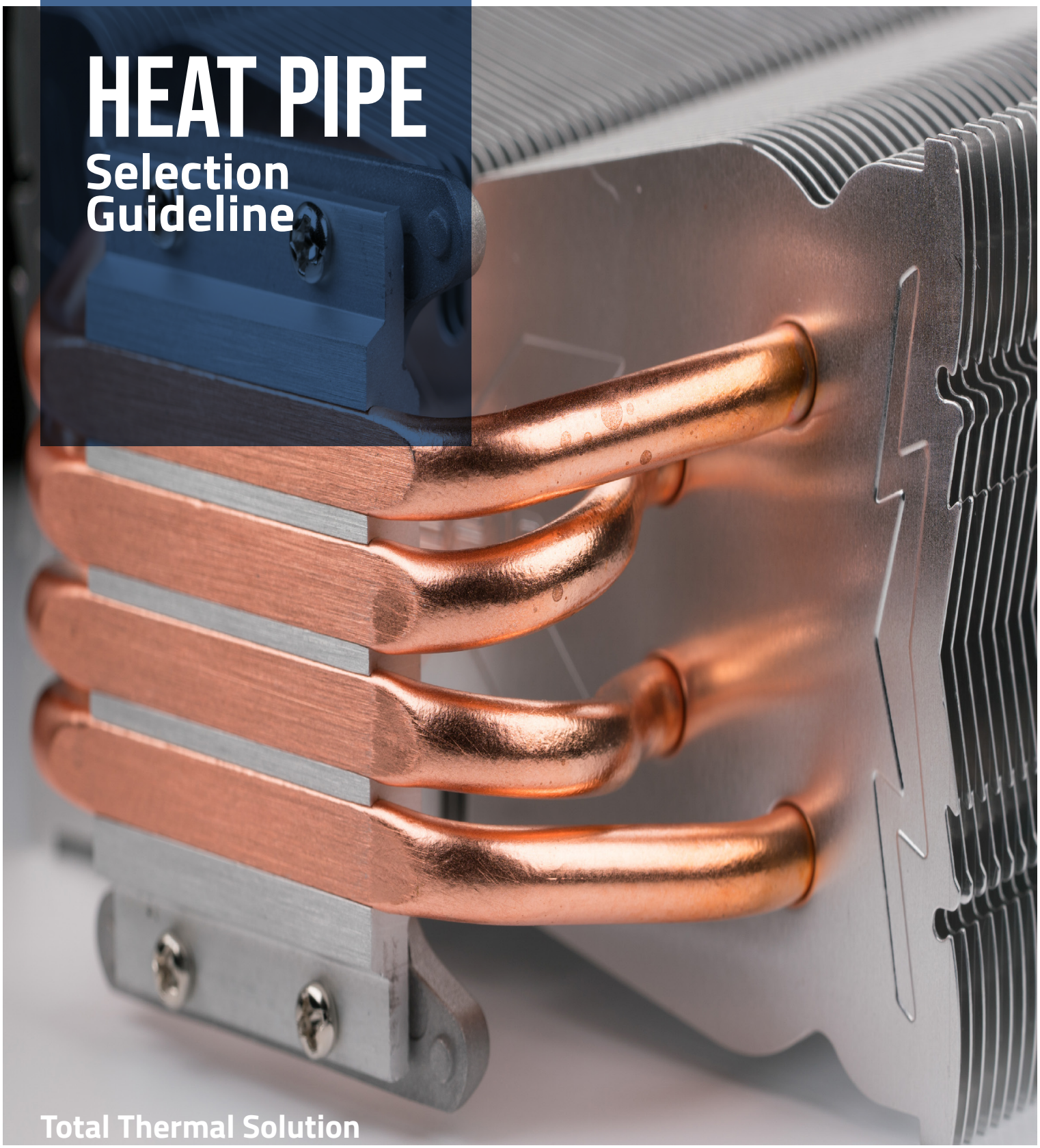

Total Thermal Solution

FLUID PHASE CHANGER

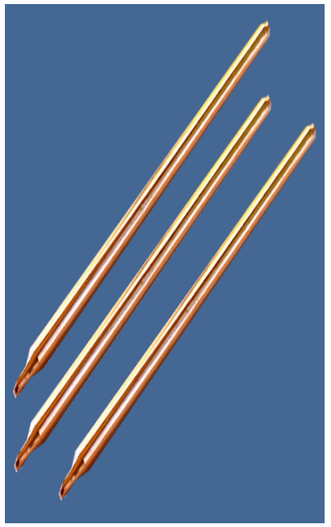

Closed loops transfer heat quickly through evaporation and condensation

Heat pipes are used to transport heat over a distance with very low thermal resistance. This is very helpful when small or distant heat sources need to be dissipated over a larger area or moved to a remote heat exchanger. Heat pipes are a Fluid Phase Change application, often referred to as “re-circulating,” because they use a closed loop to transfer heat quickly through evaporation and condensation within the heat pipe.

Heat pipes do not actually dissipate the heat to the environment, but serve to move heat efficiently within a thermal system. A heat pipe is a copper tube with an internal wick structure that is sealed on both ends with a small amount of water inside. As heat is applied to the pipe, the water will boil and turn to a gas, which then travels to the colder section of the heat pipe where it condenses back to a liquid. It is the evaporating and condensing of the water that form a pumping action to move the water (and thus the heat) from end to end of the pipe.

There are many types of wick structure that can be used within the heat pipe and they are generally classified into grooved, mesh, powder and hybrid. A grooved heat pipe is a copper tube with a series of shallow grooves around the internal perimeter of the heat pipe. While the water is a liquid, it travels in the grooves and while it is a vapor it travels in the open space of the pipe. Grooved pipes can be used in horizontal orientations, but are very limited in performance if used above 15° out of horizontal. A mesh heat pipe is a smooth wall copper tube with a woven copper mesh installed along the interior of the pipe. The mesh is designed to remain in contact with the walls of the pipe in areas where the pipe may be bent or flattened. Mesh pipes can be used in horizontal and orientations up to 30° out of horizontal. A powder wick heat pipe can also be known as a sintered heat pipe.

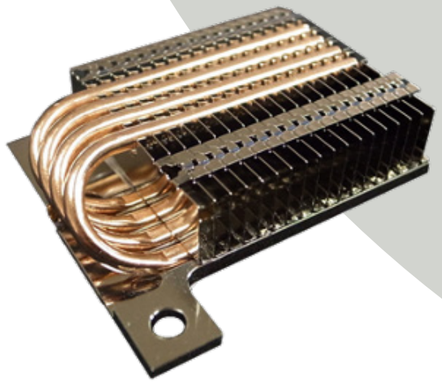

HIGH PERFORMANCE HEAT PIPES

discover the best heat pipe for your application

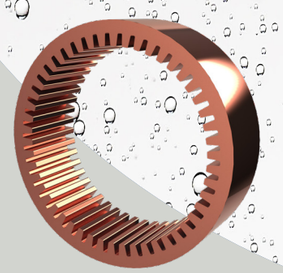

Grooved Heat Pipe

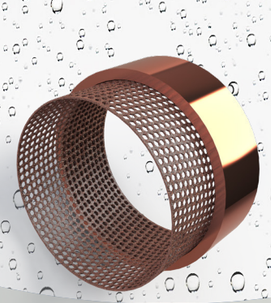

Mesh Heat Pipe

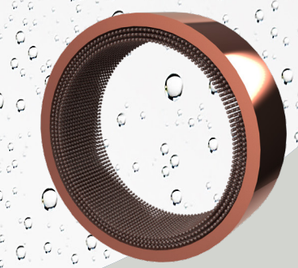

Powder Wick Heat Pipe

During the manufacturing process a mandrel is installed in the center of the pipe and copper powder is poured into the pipe around the mandrel. After the powder is sufficiently packed, the parts are placed into a sintering oven. Once at temperature, the copper powder will stick to the pipe and to itself, forming numerous internal pockets like a sponge. Because of the small pocket sizes, sintered pipes can efficiently move the water and can be used horizontally, vertically and all points in between including upside down. Wakefield Thermal primarily sells sintered, or powder, style heat pipes due to their higher performance and the best heat pipe for your application.

WHY USE HEAT PIPES?

Many thermal systems benefit from the addition of heat pipes, especially when heat sources are dense and/or remote to the final heat exchanger. Computer applications, such as processors, graphics cards and other chip-sets, have high thermally dissipated power in a small area. Fan heat sink combinations used in these applications can offer high-performance dissipation to the ambient, but much of the battle is to bring the heat to the heat exchanger with as little temperature change as possible. Heat pipes excel at this and can transport large heat loads from small areas with very little temperature difference.

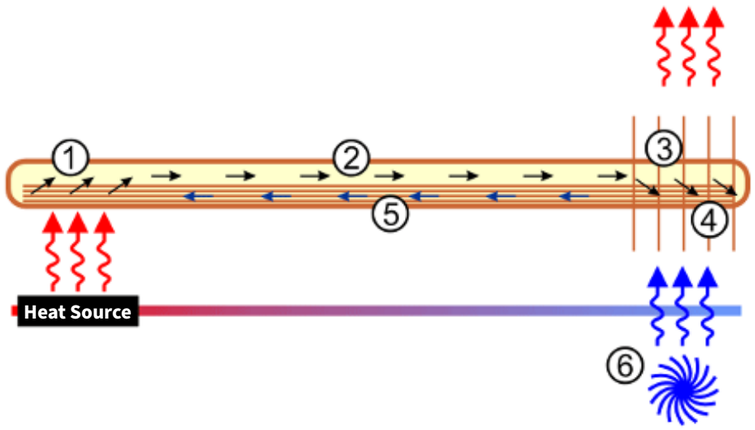

1. Working fluid absorbs heat while evaporating to vapor
2. Vapor transfers along the cavity to the lower temperature area
3. Vapor condenses back to fluid, discharging heat
4. Fluid is absorbed by the sintered/powdered wick structure
5. Fluid returns to high temperature end via capillary force in the wick structure
6. Natural or forced convection air flow dissipates excess heat to ambient

Key Features

Material: Copper
Wick Structure: Powder sintered copper
Light weight
Versatile with high thermal performance

ENVIRONMENTS THAT USE HEAT PIPES

- Telecommunications
- Aerospace
- Transportation
- Computers and Datacenters

Heat pipes have proven to be robust and reliable over many years in these types of applications. The next section will give more technical detail on the performance of heat pipes depending on diameter, length, and angle of use.

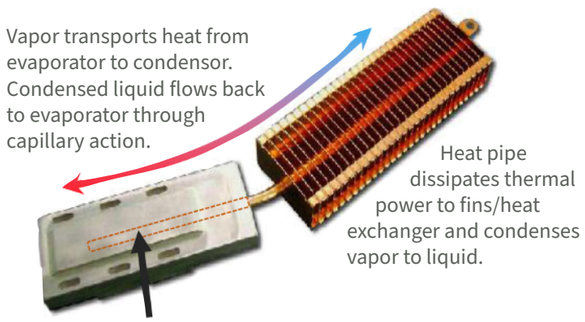

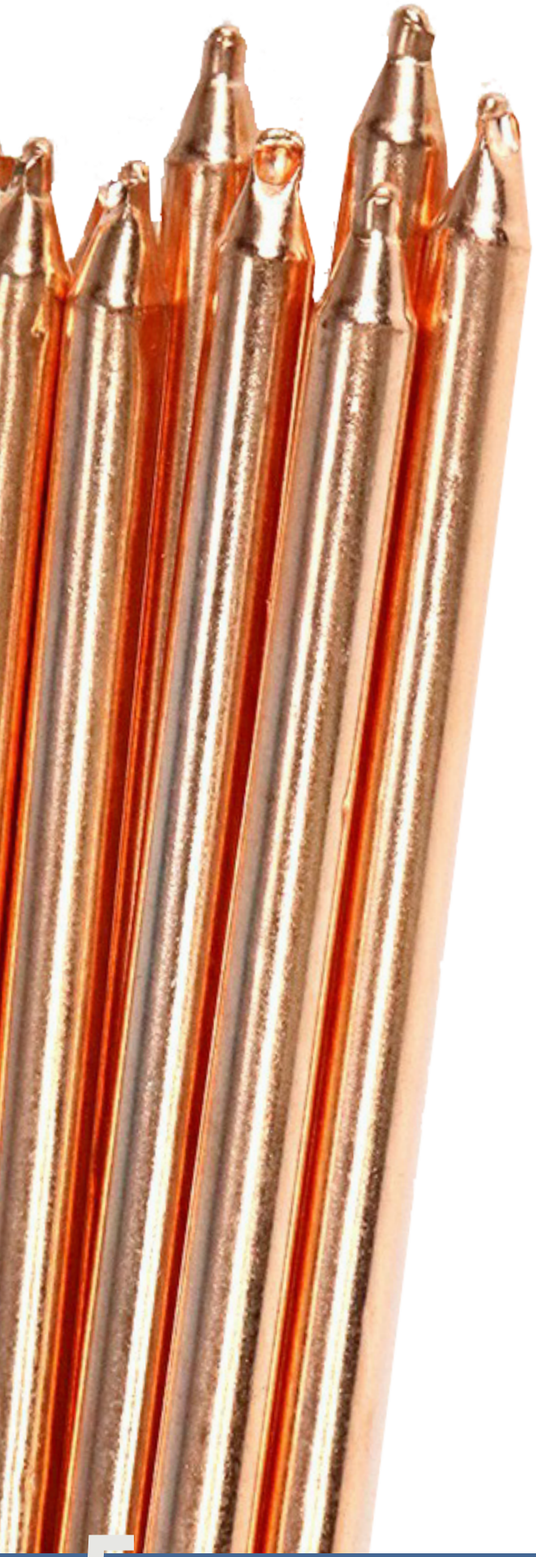

HEAT PIPE BASICS

- Picking the correct plate
- Transport
- General parameters
- Bending
- Flattening

CONSIDER ORIENTATION

When selecting the diameter and length of heat pipe it is important to consider the orientation with respect to gravity and overall heat load for the thermal system. The transport of vapor within the heat pipe is responsible for the thermal conduction from one end to the other. A larger diameter heat pipe can transport more vapor, translating into a larger heat carrying capacity. Thermal capacity is increased when the heat source is lower than the condenser (or ambient heat exchanger) because gravity assists the return of condensed water back to the heat source. The opposite is also true as the thermal capacity is reduced when the condensed water must move by capillary forces back to the heat source against gravity. This effect is exaggerated with longer heat pipes and testing has shown that the gravity effect can nearly double the thermal capacity in the advantageous direction and cut the capacity in half in the deleterious direction from the heat pipe in the horizontal orientation. In the short heat pipe extreme (3”-4” length), this effect is nearly zero, so please consult with Wakefield Thermal engineers to find the right solution for your application.

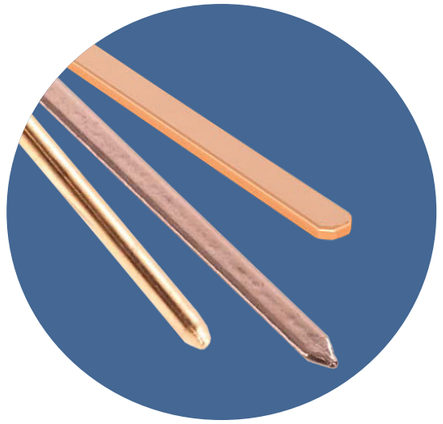

WAKEFIELDTHERMAL

Our round heat pipes (not flattened) have a max temperature range of -40 C to 150 C. The heat pipe phase change benefits don’t begin until you get to 10 C. Although 150 C is our max rated temperature we do recommend a max continuous use temperature of 130 C to help facilitate design integration.

HEAT CARRYING CAPACITY OF ROUND HEAT PIPES

Heat Carrying Capacity (Watts)		Heat Pipe Outer Diameter (OD)						
		3mm	4mm	5mm	6mm	8mm	10mm	12mm
Heat Pipe Length	70mm	33W	89W	144W	192W	278W	289W	375W
	100mm	23W	62W	101W	134W	194W	249W	318W
	150mm	15W	41W	67W	89W	129W	166W	212W
	200mm	11W	31W	41W	67W	97W	124W	158W
	250mm		25W	38W	53W	77W	99W	126W
	300mm		21W	30W	51W	64W	83W	106W
	350mm			28W	38W	55W	71W	90W
	400mm				33W	48W	62W	79W
	450mm					43W	55W	70W
	500mm					39W	49W	62W
	550mm						45W	57W
	600mm						23W	30W

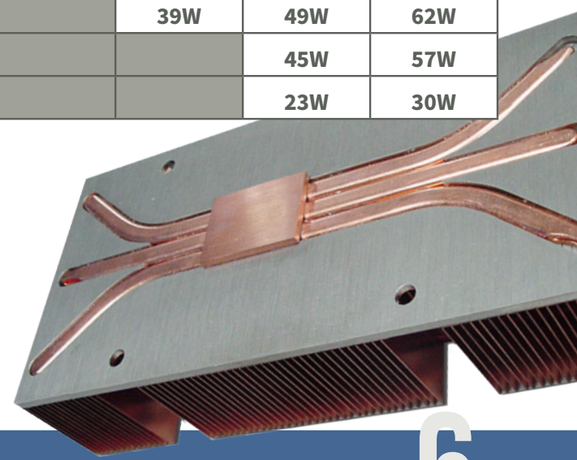

WAKEFIELDTHERMAL

FLATTENING HEAT PIPES

Bending radius differs for heat pipes of different diameters depending on the method of bending

Flattening is another aspect of heat pipes that effect their performance. Often it is necessary to flatten a heat pipe to fit into a desired shape or gap or to increase the contact area of the pipe with the heat. Since flattening reduces the effective cross-sectional area of the round pipe, the thermal capacity is reduced, just as if a smaller diameter pipe was being used. Typical tolerance on flattened heat pipe dimensions are +/- 0.4mm. The larger diameter of the starting heat pipe, the larger reduction of thermal capacity is seen when flattening. Also, the larger diameter pipes cannot be flattened to the same ultimate dimension as the smaller pipes without disrupting heat flow altogether. This is also true for bending of pipes. The radius of bending is usually 3-5x the diameter of the heat pipe depending on the pipe diameter and the process of bending the pipe. The potential danger in overbending is to collapse the pipe, effectively cutting off vapor and thermal transport.

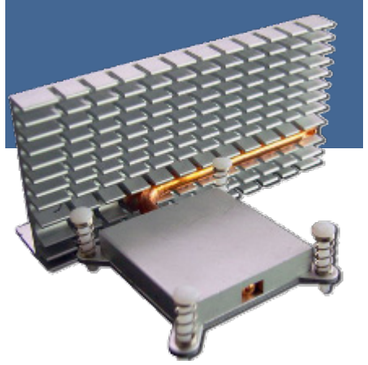

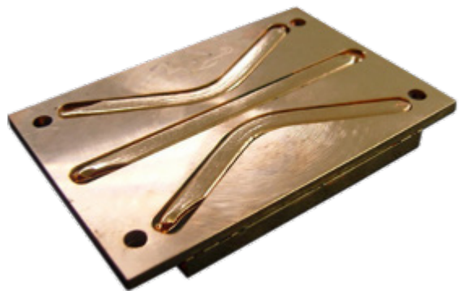

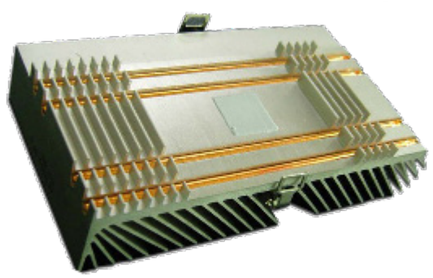

SIZE OF FLATTENED HEAT PIPES

Starting Diameter (OD, mm)	Thickness (mm)	Flattened Width (mm)
3	2	3.57
	2.5	3.29
4	2	5.14
	2.5	4.86
	3	4.57
	3.5	4.29
5	2.5	6.43
	3	6.14
	3.5	5.86
	4	5.57
	4.5	5.29
6	2.5	8.00
	3	7.71
	3.5	7.43
	4	7.14
	4.5	6.86
	5	6.57
8	2.5	11.14
	3	10.86
	4	10.28
	5	9.71
	6	9.14
	7	8.57
10	3	14
	4	13.43
	5	12.85
	6	12.28
	7	11.71
	8	11.14
	9	10.57
12	3	17.14
	4	16.56
	5	16
	6	15.43
	7	14.85
	8	14.28
	9	13.71
	10	13.14
	11	12.57

HEAT PIPE ASSEMBLIES

HEAT CARRYING CAPACITY OF FLATTENED HEAT PIPES

100 mm Length		Heat Pipe Original Outer Diameter (OD)						
Heat Carrying Capacity (Watts)		3mm	4mm	5mm	6mm	8mm	10mm	12mm
Flattened Height	2.0mm	14W	28W					
	2.5mm	17W	35W	12W	51W	55W		
	3.0mm		42W	15W	61W	66W	68W	67W
	4.0mm			20W	82W	89W	91W	89W
	5.0mm				102W	111W	114W	112W
	6.0mm					133W	137W	134W
	7.0mm					156W	160W	157W
	8.0mm						183W	179W
	9.0mm						206W	201W
	10.0mm							224W
	11.0mm							247W
Round	N/A	23W	62W	101W	134W	194W	249W	293W

Interfacing heat pipes with plates and heat exchangers is predominately about maximizing contact area while adhering to the flattening and bending guidelines mentioned above. In most cases, the heat pipes are slotted into channels/grooves in the plate to maximize contact. The heat pipe can be secured into the groove using solder or thermal epoxy, which also augments the contact area of the heat pipe. The heat pipe can also be clamped between two plates with matching channels/grooves which are fastened together. In the clamped configuration, thermal grease can be used to increase the contact of the heat pipe to the plates to reduce the thermal resistance of the contact interface, just as the thermal epoxy and solder did in the prior example.

300mm Length		Heat Pipe Original Outer Diameter (OD)				
Heat Carrying Capacity (Watts)		5mm	6mm	8mm	10mm	12mm
Flattened Height	3.0mm	25W	20W	22W	22W	24W
	4.0mm	34W	27W	29W	30W	32W
	5.0mm		34W	36W	38W	40W
	6.0mm			44W	45W	48W
	7.0mm			51W	53W	56W
	8.0mm				61W	64W
	9.0mm				69W	72W
	10.0mm					80W
	11.0mm					88W
Round	N/A	34W	45W	64W	83W	97W

HEAT PIPE BENDING TOOL

Wakefield Thermal has developed a heat pipe bending tool to assist design engineers for bending heat pipes at specific radius without the risk of damaging the heat pipe itself. Simply select the diameter of the heat pipe and utilize the tool to achieve your ideal bend radius. Note: Heat pipes sold separately.

Part Number	Description
HP-Tool-3MM	3mm Heat Pipe Bending Tool
HP-Tool-4MM	4mm Heat Pipe Bending Tool
HP-Tool-6MM	6mm Heat Pipe Bending Tool
HP-Tool-8MM	8mm Heat Pipe Bending Tool

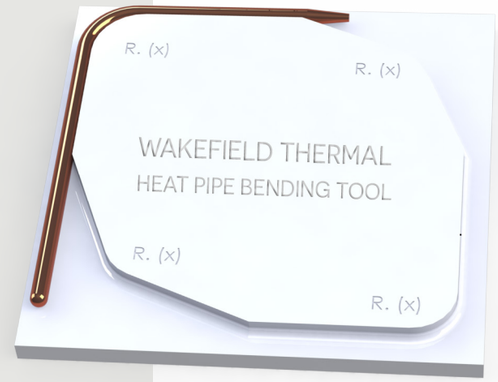

HP-Tool-3MM

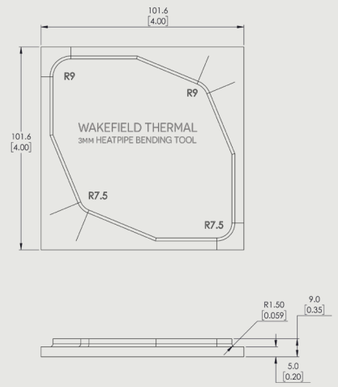

HP-Tool-4MM

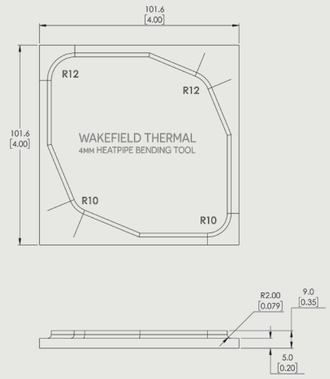

HP-Tool-6MM

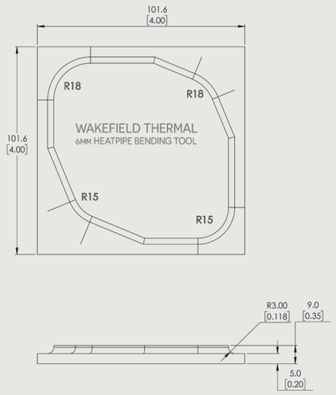

HP-Tool-8MM

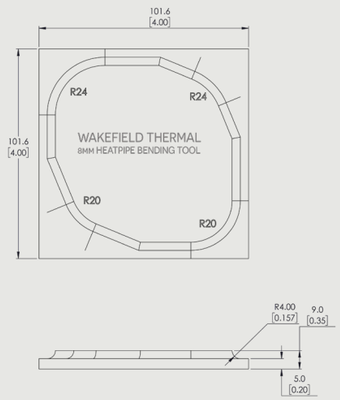

By Hand

- 4mm: 4 x diameter
- 6mm: 4 x diameter
- 8mm: 5 x diameter

Tooling:

- Can achieve bending radius of 3x of heat pipe diameter independent of heat pipe diameter

STANDARD HEAT PIPES

Wakefield Thermal offers individual Heat Pipes through distribution. These most common offerings are a great option for testing, sampling, and validating your heat pipe solution into eventual production.

When building or testing your heat sink assembly, please feel free to contact one of Wakefield Thermal's authorized distributors to purchase. Always remember to contact us directly for free consultation on assembly design or parameter questions.

Part #	Description	Shape	Power - Cooling	Length	Diameter	Material
124641	ROUND, COPPER HEATPIPE, SINTERED, 3mmX70mm	Round	33.4W @ 70mm	2.756in (70mm)	0.118in (3mm)	COPPER
124642	ROUND, COPPER HEATPIPE, SINTERED, 3mmX100mm	Round	23W @ 100mm	3.937in (100mm)	0.118in (3mm)	COPPER
124643	ROUND, COPPER HEATPIPE, SINTERED, 3mmX150mm	Round	15.6W @ 150mm	5.906in (150mm)	0.118in (3mm)	COPPER
124644	ROUND, COPPER HEATPIPE, SINTERED, 3mmX200mm	Round	11.7W @ 200mm	7.874in (200mm)	0.118in (3mm)	COPPER
124645	ROUND, COPPER HEATPIPE, SINTERED, 4mmX300mm	Round	27W @ 300mm	11.811in (300mm)	0.157in (4mm)	COPPER
121686	ROUND, COPPER HEATPIPE, SINTERED, 4mmX70mm	Round	89W @ 70mm	2.756in (70mm)	0.157in (4mm)	COPPER
121687	ROUND, COPPER HEATPIPE, SINTERED, 4mmX100mm	Round	62W @ 100mm	3.937in (100mm)	0.157in (4mm)	COPPER
121688	ROUND, COPPER HEATPIPE, SINTERED, 4mmX150mm	Round	41W @ 150mm	5.906in (150mm)	0.157in (4mm)	COPPER
124646	ROUND, COPPER HEATPIPE, SINTERED, 4mmX200mm	Round	31W @ 200mm	7.874in (200mm)	0.157in (4mm)	COPPER
124647	ROUND, COPPER HEATPIPE, SINTERED, 4mmX250mm	Round	25W @ 250mm	9.843in (250mm)	0.157in (4mm)	COPPER
124648	ROUND, COPPER HEATPIPE, SINTERED, 5mmX300mm	Round	34W @ 300mm	11.811in (300mm)	0.197in (5mm)	COPPER
124649	ROUND, COPPER HEATPIPE, SINTERED, 5mmX350mm	Round	28W @ 350mm	13.78in (350mm)	0.197in (5mm)	COPPER
124650	ROUND, COPPER HEATPIPE, SINTERED, 5mmX70mm	Round	144W @ 70mm	2.756in (70mm)	0.197in (5mm)	COPPER
124651	ROUND, COPPER HEATPIPE, SINTERED, 5mmX100mm	Round	101W @ 100mm	3.937in (100mm)	0.197in (5mm)	COPPER
124652	ROUND, COPPER HEATPIPE, SINTERED, 5mmX150mm	Round	67W @ 150mm	5.906in (150mm)	0.197in (5mm)	COPPER
124653	ROUND, COPPER HEATPIPE, SINTERED, 5mmX200mm	Round	47W @ 200mm	7.874in (200mm)	0.197in (5mm)	COPPER
124654	ROUND, COPPER HEATPIPE, SINTERED, 5mmX250mm	Round	40W @ 250mm	9.843in (250mm)	0.197in (5mm)	COPPER
110582	ROUND, COPPER HEATPIPE, SINTERED, 6mmX300mm	Round	45W @ 300mm	11.811in (300mm)	0.236in (6mm)	COPPER
124655	ROUND, COPPER HEATPIPE, SINTERED, 6mmX350mm	Round	38W @ 350mm	13.78in (350mm)	0.236in (6mm)	COPPER

Part #	Description	Shape	Power - Cooling	Length	Diameter	Material
124656	ROUND, COPPER HEATPIPE, SINTERED, 6mmX400mm	Round	33W @ 400mm	15.748in (400mm)	0.236in (6mm)	COPPER
124657	ROUND, COPPER HEATPIPE, SINTERED, 6mmX70mm	Round	192W @ 70mm	2.756in (70mm)	0.236in (6mm)	COPPER
110578	ROUND, COPPER HEATPIPE, SINTERED, 6mmX100mm	Round	134W @ 100mm	3.937in (100mm)	0.236in (6mm)	COPPER
110579	ROUND, COPPER HEATPIPE, SINTERED, 6mmX150mm	Round	89W @ 150mm	5.906in (150mm)	0.236in (6mm)	COPPER
110580	ROUND, COPPER HEATPIPE, SINTERED, 6mmX200mm	Round	64W @ 200mm	7.874in (200mm)	0.236in (6mm)	COPPER
110581	ROUND, COPPER HEATPIPE, SINTERED, 6mmX250mm	Round	53W @ 250mm	9.843in (250mm)	0.236in (6mm)	COPPER
110585	ROUND, COPPER HEATPIPE, SINTERED, 8mmX300mm	Round	64W @ 300mm	11.811in (300mm)	0.315in (8mm)	COPPER
124658	ROUND, COPPER HEATPIPE, SINTERED, 8mmX350mm	Round	55W @ 350mm	13.78in (350mm)	0.315in (8mm)	COPPER
124659	ROUND, COPPER HEATPIPE, SINTERED, 8mmX400mm	Round	48W @ 400mm	15.748in (400mm)	0.315in (8mm)	COPPER
124660	ROUND, COPPER HEATPIPE, SINTERED, 8mmX450mm	Round	43W @ 450mm	17.717in (450mm)	0.315in (8mm)	COPPER
124661	ROUND, COPPER HEATPIPE, SINTERED, 8mmX500mm	Round	39W @ 500mm	19.685in (500mm)	0.315in (8mm)	COPPER
124682	ROUND, COPPER HEATPIPE, SINTERED, 8mmX70mm	Round	278W @ 70mm	2.756in (70mm)	0.315in (8mm)	COPPER
121968	ROUND, COPPER HEATPIPE, SINTERED, 8mmX100mm	Round	194W @ 100mm	3.937in (100mm)	0.315in (8mm)	COPPER
124662	ROUND, COPPER HEATPIPE, SINTERED, 8mmX150mm	Round	129W @ 150mm	5.906in (150mm)	0.315in (8mm)	COPPER
110583	ROUND, COPPER HEATPIPE, SINTERED, 8mmX200mm	Round	97W @ 200mm	7.874in (200mm)	0.315in (8mm)	COPPER
110584	ROUND, COPPER HEATPIPE, SINTERED, 8mmX250mm	Round	77W @ 250mm	9.843in (250mm)	0.315in (8mm)	COPPER
121692	ROUND, COPPER HEATPIPE, SINTERED, 10mmX300mm	Round	83W @ 300mm	11.811in (300mm)	0.394in (10mm)	COPPER
127872	ROUND, COPPER HEATPIPE, SINTERED, 10mmX70mm	Round	289W @ 70mm	2.756in (70mm)	0.394in (10mm)	COPPER
121689	ROUND, COPPER HEATPIPE, SINTERED, 10mmX100mm	Round	249W @ 100mm	3.937in (100mm)	0.394in (10mm)	COPPER
124669	ROUND, COPPER HEATPIPE, SINTERED, 10mmX150mm	Round	166W @ 150mm	5.906in (150mm)	0.394in (10mm)	COPPER
121690	ROUND, COPPER HEATPIPE, SINTERED, 10mmX200mm	Round	124W @ 200mm	7.874in (200mm)	0.394in (10mm)	COPPER
121691	ROUND, COPPER HEATPIPE, SINTERED, 10mmX250mm	Round	99W @ 250mm	9.843in (250mm)	0.394in (10mm)	COPPER
124663	ROUND, COPPER HEATPIPE, SINTERED, 10mmX350mm	Round	71W @ 350mm	13.78in (350mm)	0.394in (10mm)	COPPER
124664	ROUND, COPPER HEATPIPE, SINTERED, 10mmX400mm	Round	62W @ 400mm	15.748in (400mm)	0.394in (10mm)	COPPER
124665	ROUND, COPPER HEATPIPE, SINTERED, 10mmX450mm	Round	55W @ 450mm	17.717in (450mm)	0.394in (10mm)	COPPER

Part #	Description	Shape	Power - Cooling	Length	Diameter	Material
124666	ROUND, COPPER HEATPIPE, SINTERED, 10mmX500mm	Round	49W @ 500mm	19.685in (500mm)	0.394in (10mm)	COPPER
124667	ROUND, COPPER HEATPIPE, SINTERED, 10mmX550mm	Round	45W @ 550mm	21.654in (550mm)	0.394in (10mm)	COPPER
124668	ROUND, COPPER HEATPIPE, SINTERED, 10mmX600mm	Round	41W @ 600mm	23.622in (600mm)	0.394in (10mm)	COPPER
124670	ROUND, COPPER HEATPIPE, SINTERED, 12mmX70mm	Round	341W @ 70mm	2.756in (70mm)	0.472in (12mm)	COPPER
124671	ROUND, COPPER HEATPIPE, SINTERED, 12mmX100mm	Round	293W @ 100mm	3.937in (100mm)	0.472in (12mm)	COPPER
124672	ROUND, COPPER HEATPIPE, SINTERED, 12mmX150mm	Round	195W @ 150mm	5.906in (150mm)	0.472in (12mm)	COPPER
124673	ROUND, COPPER HEATPIPE, SINTERED, 12mmX200mm	Round	146W @ 200mm	7.874in (200mm)	0.472in (12mm)	COPPER
124674	ROUND, COPPER HEATPIPE, SINTERED, 12mmX250mm	Round	116W @ 250mm	9.843in (250mm)	0.472in (12mm)	COPPER
124675	ROUND, COPPER HEATPIPE, SINTERED, 12mmX300mm	Round	97W @ 300mm	11.811in (300mm)	0.472in (12mm)	COPPER
124676	ROUND, COPPER HEATPIPE, SINTERED, 12mmX350mm	Round	83W @ 350mm	13.78in (350mm)	0.472in (12mm)	COPPER
124677	ROUND, COPPER HEATPIPE, SINTERED, 12mmX400mm	Round	73W @ 400mm	15.748in (400mm)	0.472in (12mm)	COPPER
124678	ROUND, COPPER HEATPIPE, SINTERED, 12mmX450mm	Round	64W @ 450mm	17.717in (450mm)	0.472in (12mm)	COPPER
124679	ROUND, COPPER HEATPIPE, SINTERED, 12mmX500mm	Round	57W @ 500mm	19.685in (500mm)	0.472in (12mm)	COPPER
124680	ROUND, COPPER HEATPIPE, SINTERED, 12mmX550mm	Round	53W @ 550mm	21.654in (550mm)	0.472in (12mm)	COPPER
124681	ROUND, COPPER HEATPIPE, SINTERED, 12mmX600mm	Round	48W @ 600mm	23.622in (600mm)	0.472in (12mm)	COPPER
120229	FLATTENED,COPPER HEATPIPE, SINTERED, WATER,1mmX 5mmX100mm	Flat	12W @ 100.00mm	3.937in (100mm)	-	COPPER
120231	FLATTENED,COPPER HEATPIPE, SINTERED, WATER,1.5mmX 6mmX100mm	Flat	25W @ 100.00mm	3.937in (100mm)	-	COPPER
125982	FLATTENED,COPPER HEATPIPE, SINTERED, WATER,2mmX 3.57mmX70mm	Flat	20W @ 70mm	2.756in (70mm)	-	COPPER
125983	FLATTENED,COPPER HEATPIPE, SINTERED, WATER,2mmX 3.57mmX100mm	Flat	14W @ 100mm	3.937in (100mm)	-	COPPER
125984	FLATTENED,COPPER HEATPIPE, SINTERED, WATER,2mmX 3.57mmX150mm	Flat	9W @ 150mm	5.906in (150mm)	-	COPPER
125985	FLATTENED,COPPER HEATPIPE, SINTERED, WATER,2mmX 3.57mmX200mm	Flat	7W @ 200mm	7.874in (200mm)	-	COPPER
125986	FLATTENED,COPPER HEATPIPE, SINTERED, WATER,2mmX 5.14mmX70mm	Flat	40W @ 70mm	2.756in (70mm)	-	COPPER
125987	FLATTENED,COPPER HEATPIPE, SINTERED, WATER,2mmX 5.14mmX100mm	Flat	28W @ 100mm	3.937in (100mm)	-	COPPER
125988	FLATTENED,COPPER HEATPIPE, SINTERED, WATER,2mmX 5.14mmX150mm	Flat	18W @ 150mm	5.906in (150mm)	-	COPPER
125989	FLATTENED,COPPER HEATPIPE, SINTERED, WATER,2mmX 5.14mmX200mm	Flat	14W @ 200mm	7.874in (200mm)	-	COPPER

Part #	Description	Shape	Power - Cooling	Length	Diameter	Material
125990	FLATTENED,COPPER HEATPIPE, SINTERED, WATER,2mmX 5.14mmX250mm	Flat	11W @ 250mm	9.843in (250mm)	-	COPPER
125991	FLATTENED,COPPER HEATPIPE, SINTERED, WATER,2mmX 6.71mmX70mm	Flat	52W @ 70mm	2.756in (70mm)	-	COPPER
125992	FLATTENED,COPPER HEATPIPE, SINTERED, WATER,2mmX 6.71mmX100mm	Flat	37W @ 100mm	3.937in (100mm)	-	COPPER
125993	FLATTENED,COPPER HEATPIPE, SINTERED, WATER,2mmX 6.71mmX150mm	Flat	24W @ 150mm	5.906in (150mm)	-	COPPER
125994	FLATTENED,COPPER HEATPIPE, SINTERED, WATER,2mmX 6.71mmX200mm	Flat	17W @ 200mm	7.874in (200mm)	-	COPPER
125995	FLATTENED,COPPER HEATPIPE, SINTERED, WATER,2mmX 6.71mmX250mm	Flat	14W @ 250mm	9.843in (250mm)	-	COPPER
125996	FLATTENED,COPPER HEATPIPE, SINTERED, WATER,2mmX 6.71mmX300mm	Flat	12W @ 300mm	11.811in (300mm)	-	COPPER
125997	FLATTENED,COPPER HEATPIPE, SINTERED, WATER,2mmX 6.71mmX350mm	Flat	10W @ 350mm	13.78in (350mm)	-	COPPER
125998	FLATTENED,COPPER HEATPIPE, SINTERED, WATER,2.5mmX 3.29mmX70mm	Flat	25W @ 70mm	2.756in (70mm)	-	COPPER
125999	FLATTENED,COPPER HEATPIPE, SINTERED, WATER,2.5mmX 3.29mmX100mm	Flat	17W @ 100mm	3.937in (100mm)	-	COPPER
126000	FLATTENED,COPPER HEATPIPE, SINTERED, WATER,2.5mmX 3.29mmX150mm	Flat	11W @ 150mm	5.906in (150mm)	-	COPPER
126001	FLATTENED,COPPER HEATPIPE, SINTERED, WATER,2.5mmX 3.29mmX200mm	Flat	8W @ 200mm	7.874in (200mm)	-	COPPER
126002	FLATTENED,COPPER HEATPIPE, SINTERED, WATER,2.5mmX 4.86mmX70mm	Flat	51W @ 70mm	2.756in (70mm)	-	COPPER
126003	FLATTENED,COPPER HEATPIPE, SINTERED, WATER,2.5mmX 4.86mmX100mm	Flat	35W @ 100mm	3.937in (100mm)	-	COPPER
126004	FLATTENED,COPPER HEATPIPE, SINTERED, WATER,2.5mmX 4.86mmX150mm	Flat	23W @ 150mm	5.906in (150mm)	-	COPPER
126005	FLATTENED,COPPER HEATPIPE, SINTERED, WATER,2.5mmX 4.86mmX200mm	Flat	17W @ 200mm	7.874in (200mm)	-	COPPER
126006	FLATTENED,COPPER HEATPIPE, SINTERED, WATER,2.5mmX 4.86mmX250mm	Flat	14W @ 250mm	9.843in (250mm)	-	COPPER
126007	FLATTENED,COPPER HEATPIPE, SINTERED, WATER,2.5mmX 6.43mmX70mm	Flat	15W @ 70mm	2.756in (70mm)	-	COPPER
126008	FLATTENED,COPPER HEATPIPE, SINTERED, WATER,2.5mmX 6.43mmX100mm	Flat	12W @ 100mm	3.937in (100mm)	-	COPPER
126009	FLATTENED,COPPER HEATPIPE, SINTERED, WATER,2.5mmX 6.43mmX150mm	Flat	66W @ 150mm	5.906in (150mm)	-	COPPER
126010	FLATTENED,COPPER HEATPIPE, SINTERED, WATER,2.5mmX 6.43mmX200mm	Flat	46W @ 200mm	7.874in (200mm)	-	COPPER
126011	FLATTENED,COPPER HEATPIPE, SINTERED, WATER,2.5mmX 6.43mmX250mm	Flat	30W @ 250mm	9.843in (250mm)	-	COPPER
126012	FLATTENED,COPPER HEATPIPE, SINTERED, WATER,2.5mmX 6.43mmX300mm	Flat	21W @ 300mm	11.811in (300mm)	-	COPPER
126013	FLATTENED,COPPER HEATPIPE, SINTERED, WATER,2.5mmX 6.43mmX350mm	Flat	18W @ 350mm	13.78in (350mm)	-	COPPER
126014	FLATTENED,COPPER HEATPIPE, SINTERED, WATER,2.5mmX 8mmX70mm	Flat	73W @ 70mm	2.756in (70mm)	-	COPPER

Part #	Description	Shape	Power - Cooling	Length	Diameter	Material
121716	FLATTENED,COPPER HEATPIPE, SINTERED, WATER,2.5mmX 8mmX100mm	Flat	51W @ 100mm	3.937in (100mm)	-	COPPER
121717	FLATTENED,COPPER HEATPIPE, SINTERED, WATER,2.5mmX 8mmX150mm	Flat	34W @ 150mm	5.906in (150mm)	-	COPPER
121718	FLATTENED,COPPER HEATPIPE, SINTERED, WATER,2.5mmX 8mmX200mm	Flat	24W @ 200mm	7.874in (200mm)	-	COPPER
121719	FLATTENED,COPPER HEATPIPE, SINTERED, WATER,2.5mmX 8mmX250mm	Flat	20W @ 250mm	9.843in (250mm)	-	COPPER
126019	FLATTENED,COPPER HEATPIPE, SINTERED, WATER,2.5mmX 8mmX300mm	Flat	17W @ 300mm	11.811in (300mm)	-	COPPER
126020	FLATTENED,COPPER HEATPIPE, SINTERED, WATER,2.5mmX 8mmX350mm	Flat	14W @ 350mm	13.78in (350mm)	-	COPPER
126021	FLATTENED,COPPER HEATPIPE, SINTERED, WATER,2.5mmX 8mmX400mm	Flat	12W @ 400mm	15.748in (400mm)	-	COPPER
126022	FLATTENED,COPPER HEATPIPE, SINTERED, WATER,2.5mmX 11.14mmX70mm	Flat	79W @ 70mm	2.756in (70mm)	-	COPPER
126023	FLATTENED,COPPER HEATPIPE, SINTERED, WATER,2.5mmX 11.14mmX100mm	Flat	55W @ 100mm	3.937in (100mm)	-	COPPER
126024	FLATTENED,COPPER HEATPIPE, SINTERED, WATER,2.5mmX 11.14mmX150mm	Flat	37W @ 150mm	5.906in (150mm)	-	COPPER
126025	FLATTENED,COPPER HEATPIPE, SINTERED, WATER,2.5mmX 11.14mmX200mm	Flat	27W @ 200mm	7.874in (200mm)	-	COPPER
126026	FLATTENED,COPPER HEATPIPE, SINTERED, WATER,2.5mmX 11.14mmX250mm	Flat	22W @ 250mm	9.843in (250mm)	-	COPPER
126027	FLATTENED,COPPER HEATPIPE, SINTERED, WATER,2.5mmX 11.14mmX300mm	Flat	18W @ 300mm	11.811in (300mm)	-	COPPER
126028	FLATTENED,COPPER HEATPIPE, SINTERED, WATER,2.5mmX 11.14mmX350mm	Flat	15W @ 350mm	13.78in (350mm)	-	COPPER
126029	FLATTENED,COPPER HEATPIPE, SINTERED, WATER,2.5mmX 11.14mmX400mm	Flat	13W @ 400mm	15.748in (400mm)	-	COPPER
126030	FLATTENED,COPPER HEATPIPE, SINTERED, WATER,2.5mmX 11.14mmX450mm	Flat	12W @ 450mm	17.717in (450mm)	-	COPPER
126031	FLATTENED,COPPER HEATPIPE, SINTERED, WATER,2.5mmX 11.14mmX500mm	Flat	11W @ 500mm	19.685in (500mm)	-	COPPER
126032	FLATTENED,COPPER HEATPIPE, SINTERED, WATER,2.7mmX 4.74mmX70mm	Flat	55W @ 70mm	2.756in (70mm)	-	COPPER
126033	FLATTENED,COPPER HEATPIPE, SINTERED, WATER,2.7mmX 4.74mmX100mm	Flat	38W @ 100mm	3.937in (100mm)	-	COPPER
126034	FLATTENED,COPPER HEATPIPE, SINTERED, WATER,2.7mmX 4.74mmX150mm	Flat	25W @ 150mm	5.906in (150mm)	-	COPPER
126035	FLATTENED,COPPER HEATPIPE, SINTERED, WATER,2.7mmX 4.74mmX200mm	Flat	19W @ 200mm	7.874in (200mm)	-	COPPER
126036	FLATTENED,COPPER HEATPIPE, SINTERED, WATER,2.7mmX 4.74mmX250mm	Flat	15W @ 250mm	9.843in (250mm)	-	COPPER
126037	FLATTENED,COPPER HEATPIPE, SINTERED, WATER,2.7mmX 6.31mmX70mm	Flat	16W @ 70mm	2.756in (70mm)	-	COPPER
126038	FLATTENED,COPPER HEATPIPE, SINTERED, WATER,2.7mmX 6.31mmX100mm	Flat	13W @ 100mm	3.937in (100mm)	-	COPPER
126039	FLATTENED,COPPER HEATPIPE, SINTERED, WATER,2.7mmX 6.31mmX150mm	Flat	71W @ 150mm	5.906in (150mm)	-	COPPER

Part #	Description	Shape	Power - Cooling	Length	Diameter	Material
126040	FLATTENED,COPPER HEATPIPE, SINTERED, WATER,2.7mmX 6.31mmX200mm	Flat	50W @ 200mm	7.874in (200mm)	-	COPPER
126041	FLATTENED,COPPER HEATPIPE, SINTERED, WATER,2.7mmX 6.31mmX250mm	Flat	33W @ 250mm	9.843in (250mm)	-	COPPER
126042	FLATTENED,COPPER HEATPIPE, SINTERED, WATER,2.7mmX 6.31mmX300mm	Flat	23W @ 300mm	11.811in (300mm)	-	COPPER
126043	FLATTENED,COPPER HEATPIPE, SINTERED, WATER,2.7mmX 6.31mmX350mm	Flat	19W @ 350mm	13.78in (350mm)	-	COPPER
126044	FLATTENED,COPPER HEATPIPE, SINTERED, WATER,2.7mmX 7.88mmX70mm	Flat	79W @ 70mm	2.756in (70mm)	-	COPPER
126045	FLATTENED,COPPER HEATPIPE, SINTERED, WATER,2.7mmX 7.88mmX100mm	Flat	55W @ 100mm	3.937in (100mm)	-	COPPER
126046	FLATTENED,COPPER HEATPIPE, SINTERED, WATER,2.7mmX 7.88mmX150mm	Flat	36W @ 150mm	5.906in (150mm)	-	COPPER
126047	FLATTENED,COPPER HEATPIPE, SINTERED, WATER,2.7mmX 7.88mmX200mm	Flat	26W @ 200mm	7.874in (200mm)	-	COPPER
126048	FLATTENED,COPPER HEATPIPE, SINTERED, WATER,2.7mmX 7.88mmX250mm	Flat	21W @ 250mm	9.843in (250mm)	-	COPPER
126049	FLATTENED,COPPER HEATPIPE, SINTERED, WATER,2.7mmX 7.88mmX300mm	Flat	18W @ 300mm	11.811in (300mm)	-	COPPER
126050	FLATTENED,COPPER HEATPIPE, SINTERED, WATER,2.7mmX 7.88mmX350mm	Flat	15W @ 350mm	13.78in (350mm)	-	COPPER
126051	FLATTENED,COPPER HEATPIPE, SINTERED, WATER,2.7mmX 7.88mmX400mm	Flat	13W @ 400mm	15.748in (400mm)	-	COPPER
126052	FLATTENED,COPPER HEATPIPE, SINTERED, WATER,2.7mmX 11.03mmX70mm	Flat	86W @ 70mm	2.756in (70mm)	-	COPPER
126053	FLATTENED,COPPER HEATPIPE, SINTERED, WATER,2.7mmX 11.03mmX100mm	Flat	60W @ 100mm	3.937in (100mm)	-	COPPER
126054	FLATTENED,COPPER HEATPIPE, SINTERED, WATER,2.7mmX 11.03mmX150mm	Flat	40W @ 150mm	5.906in (150mm)	-	COPPER
126055	FLATTENED,COPPER HEATPIPE, SINTERED, WATER,2.7mmX 11.03mmX200mm	Flat	30W @ 200mm	7.874in (200mm)	-	COPPER
126056	FLATTENED,COPPER HEATPIPE, SINTERED, WATER,2.7mmX 11.03mmX250mm	Flat	23W @ 250mm	9.843in (250mm)	-	COPPER
126057	FLATTENED,COPPER HEATPIPE, SINTERED, WATER,2.7mmX 11.03mmX300mm	Flat	19W @ 300mm	11.811in (300mm)	-	COPPER
126058	FLATTENED,COPPER HEATPIPE, SINTERED, WATER,2.7mmX 11.03mmX350mm	Flat	17W @ 350mm	13.78in (350mm)	-	COPPER
126059	FLATTENED,COPPER HEATPIPE, SINTERED, WATER,2.7mmX 11.03mmX400mm	Flat	14W @ 400mm	15.748in (400mm)	-	COPPER
126060	FLATTENED,COPPER HEATPIPE, SINTERED, WATER,2.7mmX 11.03mmX450mm	Flat	13W @ 450mm	17.717in (450mm)	-	COPPER
126061	FLATTENED,COPPER HEATPIPE, SINTERED, WATER,2.7mmX 11.03mmX500mm	Flat	12W @ 500mm	19.685in (500mm)	-	COPPER
126062	FLATTENED,COPPER HEATPIPE, SINTERED, WATER,3mmX 4.57mmX70mm	Flat	61W @ 70mm	2.756in (70mm)	-	COPPER
126063	FLATTENED,COPPER HEATPIPE, SINTERED, WATER,3mmX 4.57mmX100mm	Flat	42W @ 100mm	3.937in (100mm)	-	COPPER
126064	FLATTENED,COPPER HEATPIPE, SINTERED, WATER,3mmX 4.57mmX150mm	Flat	28W @ 150mm	5.906in (150mm)	-	COPPER

Part #	Description	Shape	Power - Cooling	Length	Diameter	Material
126065	FLATTENED,COPPER HEATPIPE, SINTERED, WATER,3mmX 4.57mmX200mm	Flat	21W @ 200mm	7.874in (200mm)	-	COPPER
126066	FLATTENED,COPPER HEATPIPE, SINTERED, WATER,3mmX 6.14mmX70mm	Flat	18W @ 70mm	2.756in (70mm)	-	COPPER
126067	FLATTENED,COPPER HEATPIPE, SINTERED, WATER,3mmX 6.14mmX100mm	Flat	15W @ 100mm	3.937in (100mm)	-	COPPER
126068	FLATTENED,COPPER HEATPIPE, SINTERED, WATER,3mmX 6.14mmX150mm	Flat	79W @ 150mm	5.906in (150mm)	-	COPPER
126069	FLATTENED,COPPER HEATPIPE, SINTERED, WATER,3mmX 6.14mmX200mm	Flat	55W @ 200mm	7.874in (200mm)	-	COPPER
126070	FLATTENED,COPPER HEATPIPE, SINTERED, WATER,3mmX 6.14mmX250mm	Flat	36W @ 250mm	9.843in (250mm)	-	COPPER
126071	FLATTENED,COPPER HEATPIPE, SINTERED, WATER,3mmX 6.14mmX300mm	Flat	25W @ 300mm	11.811in (300mm)	-	COPPER
126072	FLATTENED,COPPER HEATPIPE, SINTERED, WATER,3mmX 6.14mmX350mm	Flat	22W @ 350mm	13.78in (350mm)	-	COPPER
126073	FLATTENED,COPPER HEATPIPE, SINTERED, WATER,3mmX 7.71mmX70mm	Flat	88W @ 70mm	2.756in (70mm)	-	COPPER
121720	FLATTENED,COPPER HEATPIPE, SINTERED, WATER,3mmX 7.71mmX100mm	Flat	61W @ 100mm	3.937in (100mm)	-	COPPER
121721	FLATTENED,COPPER HEATPIPE, SINTERED, WATER,3mmX 7.71mmX150mm	Flat	40W @ 150mm	5.906in (150mm)	-	COPPER
121722	FLATTENED,COPPER HEATPIPE, SINTERED, WATER,3mmX 7.71mmX200mm	Flat	29W @ 200mm	7.874in (200mm)	-	COPPER
121723	FLATTENED,COPPER HEATPIPE, SINTERED, WATER,3mmX 7.71mmX250mm	Flat	24W @ 250mm	9.843in (250mm)	-	COPPER
121724	FLATTENED,COPPER HEATPIPE, SINTERED, WATER,3mmX 7.71mmX300mm	Flat	20W @ 300mm	11.811in (300mm)	-	COPPER
126079	FLATTENED,COPPER HEATPIPE, SINTERED, WATER,3mmX 7.71mmX350mm	Flat	17W @ 350mm	13.78in (350mm)	-	COPPER
126080	FLATTENED,COPPER HEATPIPE, SINTERED, WATER,3mmX 7.71mmX400mm	Flat	15W @ 400mm	15.748in (400mm)	-	COPPER
126081	FLATTENED,COPPER HEATPIPE, SINTERED, WATER,3mmX 10.85mmX70mm	Flat	95W @ 70mm	2.756in (70mm)	-	COPPER
126082	FLATTENED,COPPER HEATPIPE, SINTERED, WATER,3mmX 10.85mmX100mm	Flat	66W @ 100mm	3.937in (100mm)	-	COPPER
126083	FLATTENED,COPPER HEATPIPE, SINTERED, WATER,3mmX 10.85mmX150mm	Flat	44W @ 150mm	5.906in (150mm)	-	COPPER
126084	FLATTENED,COPPER HEATPIPE, SINTERED, WATER,3mmX 10.85mmX200mm	Flat	33W @ 200mm	7.874in (200mm)	-	COPPER
126085	FLATTENED,COPPER HEATPIPE, SINTERED, WATER,3mmX 10.85mmX250mm	Flat	26W @ 250mm	9.843in (250mm)	-	COPPER
126086	FLATTENED,COPPER HEATPIPE, SINTERED, WATER,3mmX 10.85mmX300mm	Flat	22W @ 300mm	11.811in (300mm)	-	COPPER
126087	FLATTENED,COPPER HEATPIPE, SINTERED, WATER,3mmX 10.85mmX350mm	Flat	18W @ 350mm	13.78in (350mm)	-	COPPER
126088	FLATTENED,COPPER HEATPIPE, SINTERED, WATER,3mmX 10.85mmX400mm	Flat	16W @ 400mm	15.748in (400mm)	-	COPPER
126089	FLATTENED,COPPER HEATPIPE, SINTERED, WATER,3mmX 10.85mmX450mm	Flat	14W @ 450mm	17.717in (450mm)	-	COPPER

Part #	Description	Shape	Power - Cooling	Length	Diameter	Material
126090	FLATTENED,COPPER HEATPIPE, SINTERED, WATER,3mmX 10.85mmX500mm	Flat	13W @ 500mm	19.685in (500mm)	-	COPPER
126091	FLATTENED,COPPER HEATPIPE, SINTERED, WATER,3mmX 14mmX70mm	Flat	79W @ 70mm	2.756in (70mm)	-	COPPER
126092	FLATTENED,COPPER HEATPIPE, SINTERED, WATER,3mmX 14mmX100mm	Flat	68W @ 100mm	3.937in (100mm)	-	COPPER
126093	FLATTENED,COPPER HEATPIPE, SINTERED, WATER,3mmX 14mmX150mm	Flat	45W @ 150mm	5.906in (150mm)	-	COPPER
126094	FLATTENED,COPPER HEATPIPE, SINTERED, WATER,3mmX 14mmX200mm	Flat	34W @ 200mm	7.874in (200mm)	-	COPPER
126095	FLATTENED,COPPER HEATPIPE, SINTERED, WATER,3mmX 14mmX250mm	Flat	27W @ 250mm	9.843in (250mm)	-	COPPER
126096	FLATTENED,COPPER HEATPIPE, SINTERED, WATER,3mmX 14mmX300mm	Flat	22W @ 300mm	11.811in (300mm)	-	COPPER
126097	FLATTENED,COPPER HEATPIPE, SINTERED, WATER,3mmX 14mmX350mm	Flat	19W @ 350mm	13.78in (350mm)	-	COPPER
126098	FLATTENED,COPPER HEATPIPE, SINTERED, WATER,3mmX 14mmX400mm	Flat	17W @ 400mm	15.748in (400mm)	-	COPPER
126099	FLATTENED,COPPER HEATPIPE, SINTERED, WATER,3mmX 14mmX450mm	Flat	15W @ 450mm	17.717in (450mm)	-	COPPER
126100	FLATTENED,COPPER HEATPIPE, SINTERED, WATER,3mmX 14mmX500mm	Flat	13W @ 500mm	19.685in (500mm)	-	COPPER
126101	FLATTENED,COPPER HEATPIPE, SINTERED, WATER,3mmX 14mmX550mm	Flat	12W @ 550mm	21.654in (550mm)	-	COPPER
126102	FLATTENED,COPPER HEATPIPE, SINTERED, WATER,3mmX 14mmX600mm	Flat	11W @ 600mm	23.622in (600mm)	-	COPPER
126103	FLATTENED,COPPER HEATPIPE, SINTERED, WATER,3mmX 17.14mmX70mm	Flat	78W @ 70mm	2.756in (70mm)	-	COPPER
126104	FLATTENED,COPPER HEATPIPE, SINTERED, WATER,3mmX 17.14mmX100mm	Flat	67W @ 100mm	3.937in (100mm)	-	COPPER
126105	FLATTENED,COPPER HEATPIPE, SINTERED, WATER,3mmX 17.14mmX150mm	Flat	44W @ 150mm	5.906in (150mm)	-	COPPER
126106	FLATTENED,COPPER HEATPIPE, SINTERED, WATER,3mmX 17.14mmX200mm	Flat	33W @ 200mm	7.874in (200mm)	-	COPPER
126107	FLATTENED,COPPER HEATPIPE, SINTERED, WATER,3mmX 17.14mmX250mm	Flat	26W @ 250mm	9.843in (250mm)	-	COPPER
126108	FLATTENED,COPPER HEATPIPE, SINTERED, WATER,3mmX 17.14mmX300mm	Flat	24W @ 300mm	11.811in (300mm)	-	COPPER
126109	FLATTENED,COPPER HEATPIPE, SINTERED, WATER,3mmX 17.14mmX350mm	Flat	19W @ 350mm	13.78in (350mm)	-	COPPER
126110	FLATTENED,COPPER HEATPIPE, SINTERED, WATER,3mmX 17.14mmX400mm	Flat	16W @ 400mm	15.748in (400mm)	-	COPPER
126111	FLATTENED,COPPER HEATPIPE, SINTERED, WATER,3mmX 17.14mmX450mm	Flat	14W @ 450mm	17.717in (450mm)	-	COPPER
126112	FLATTENED,COPPER HEATPIPE, SINTERED, WATER,3mmX 17.14mmX500mm	Flat	13W @ 500mm	19.685in (500mm)	-	COPPER
126113	FLATTENED,COPPER HEATPIPE, SINTERED, WATER,3mmX 17.14mmX550mm	Flat	12W @ 550mm	21.654in (550mm)	-	COPPER
126114	FLATTENED,COPPER HEATPIPE, SINTERED, WATER,3mmX 17.14mmX600mm	Flat	11W @ 600mm	23.622in (600mm)	-	COPPER

Part #	Description	Shape	Power - Cooling	Length	Diameter	Material
126115	FLATTENED,COPPER HEATPIPE, SINTERED, WATER,3.2mmX 4.46mmX70mm	Flat	65W @ 70mm	2.756in (70mm)	-	COPPER
126116	FLATTENED,COPPER HEATPIPE, SINTERED, WATER,3.2mmX 4.46mmX100mm	Flat	45W @ 100mm	3.937in (100mm)	-	COPPER
126117	FLATTENED,COPPER HEATPIPE, SINTERED, WATER,3.2mmX 4.46mmX150mm	Flat	30W @ 150mm	5.906in (150mm)	-	COPPER
126118	FLATTENED,COPPER HEATPIPE, SINTERED, WATER,3.2mmX 4.46mmX200mm	Flat	22W @ 200mm	7.874in (200mm)	-	COPPER
126119	FLATTENED,COPPER HEATPIPE, SINTERED, WATER,3.2mmX 6.03mmX70mm	Flat	20W @ 70mm	2.756in (70mm)	-	COPPER
126120	FLATTENED,COPPER HEATPIPE, SINTERED, WATER,3.2mmX 6.03mmX100mm	Flat	16W @ 100mm	3.937in (100mm)	-	COPPER
126121	FLATTENED,COPPER HEATPIPE, SINTERED, WATER,3.2mmX 6.03mmX150mm	Flat	84W @ 150mm	5.906in (150mm)	-	COPPER
126122	FLATTENED,COPPER HEATPIPE, SINTERED, WATER,3.2mmX 6.03mmX200mm	Flat	59W @ 200mm	7.874in (200mm)	-	COPPER
126123	FLATTENED,COPPER HEATPIPE, SINTERED, WATER,3.2mmX 6.03mmX250mm	Flat	39W @ 250mm	9.843in (250mm)	-	COPPER
126124	FLATTENED,COPPER HEATPIPE, SINTERED, WATER,3.2mmX 6.03mmX300mm	Flat	27W @ 300mm	11.811in (300mm)	-	COPPER
126125	FLATTENED,COPPER HEATPIPE, SINTERED, WATER,3.2mmX 6.03mmX350mm	Flat	23W @ 350mm	13.78in (350mm)	-	COPPER
126126	FLATTENED,COPPER HEATPIPE, SINTERED, WATER,3.2mmX 7.6mmX70mm	Flat	94W @ 70mm	2.756in (70mm)	-	COPPER
126127	FLATTENED,COPPER HEATPIPE, SINTERED, WATER,3.2mmX 7.6mmX100mm	Flat	65W @ 100mm	3.937in (100mm)	-	COPPER
126128	FLATTENED,COPPER HEATPIPE, SINTERED, WATER,3.2mmX 7.6mmX150mm	Flat	43W @ 150mm	5.906in (150mm)	-	COPPER
126129	FLATTENED,COPPER HEATPIPE, SINTERED, WATER,3.2mmX 7.6mmX200mm	Flat	31W @ 200mm	7.874in (200mm)	-	COPPER
126130	FLATTENED,COPPER HEATPIPE, SINTERED, WATER,3.2mmX 7.6mmX250mm	Flat	26W @ 250mm	9.843in (250mm)	-	COPPER
126131	FLATTENED,COPPER HEATPIPE, SINTERED, WATER,3.2mmX 7.6mmX300mm	Flat	22W @ 300mm	11.811in (300mm)	-	COPPER
126132	FLATTENED,COPPER HEATPIPE, SINTERED, WATER,3.2mmX 7.6mmX350mm	Flat	18W @ 350mm	13.78in (350mm)	-	COPPER
126133	FLATTENED,COPPER HEATPIPE, SINTERED, WATER,3.2mmX 7.6mmX400mm	Flat	16W @ 400mm	15.748in (400mm)	-	COPPER
126134	FLATTENED,COPPER HEATPIPE, SINTERED, WATER,3.2mmX 10.74mmX70mm	Flat	102W @ 70mm	2.756in (70mm)	-	COPPER
126135	FLATTENED,COPPER HEATPIPE, SINTERED, WATER,3.2mmX 10.74mmX100mm	Flat	71W @ 100mm	3.937in (100mm)	-	COPPER
126136	FLATTENED,COPPER HEATPIPE, SINTERED, WATER,3.2mmX 10.74mmX150mm	Flat	47W @ 150mm	5.906in (150mm)	-	COPPER
126137	FLATTENED,COPPER HEATPIPE, SINTERED, WATER,3.2mmX 10.74mmX200mm	Flat	35W @ 200mm	7.874in (200mm)	-	COPPER
126138	FLATTENED,COPPER HEATPIPE, SINTERED, WATER,3.2mmX 10.74mmX250mm	Flat	28W @ 250mm	9.843in (250mm)	-	COPPER
126139	FLATTENED,COPPER HEATPIPE, SINTERED, WATER,3.2mmX 10.74mmX300mm	Flat	23W @ 300mm	11.811in (300mm)	-	COPPER

Part #	Description	Shape	Power - Cooling	Length	Diameter	Material
126140	FLATTENED,COPPER HEATPIPE, SINTERED, WATER,3.2mmX 10.74mmX350mm	Flat	20W @ 350mm	13.78in (350mm)	-	COPPER
126141	FLATTENED,COPPER HEATPIPE, SINTERED, WATER,3.2mmX 10.74mmX400mm	Flat	17W @ 400mm	15.748in (400mm)	-	COPPER
126142	FLATTENED,COPPER HEATPIPE, SINTERED, WATER,3.2mmX 10.74mmX450mm	Flat	15W @ 450mm	17.717in (450mm)	-	COPPER
126143	FLATTENED,COPPER HEATPIPE, SINTERED, WATER,3.2mmX 10.74mmX500mm	Flat	14W @ 500mm	19.685in (500mm)	-	COPPER
126144	FLATTENED,COPPER HEATPIPE, SINTERED, WATER,3.2mmX 13.88mmX70mm	Flat	85W @ 70mm	2.756in (70mm)	-	COPPER
126145	FLATTENED,COPPER HEATPIPE, SINTERED, WATER,3.2mmX 13.88mmX100mm	Flat	73W @ 100mm	3.937in (100mm)	-	COPPER
126146	FLATTENED,COPPER HEATPIPE, SINTERED, WATER,3.2mmX 13.88mmX150mm	Flat	48W @ 150mm	5.906in (150mm)	-	COPPER
126147	FLATTENED,COPPER HEATPIPE, SINTERED, WATER,3.2mmX 13.88mmX200mm	Flat	36W @ 200mm	7.874in (200mm)	-	COPPER
126148	FLATTENED,COPPER HEATPIPE, SINTERED, WATER,3.2mmX 13.88mmX250mm	Flat	29W @ 250mm	9.843in (250mm)	-	COPPER
126149	FLATTENED,COPPER HEATPIPE, SINTERED, WATER,3.2mmX 13.88mmX300mm	Flat	24W @ 300mm	11.811in (300mm)	-	COPPER
126150	FLATTENED,COPPER HEATPIPE, SINTERED, WATER,3.2mmX 13.88mmX350mm	Flat	20W @ 350mm	13.78in (350mm)	-	COPPER
126151	FLATTENED,COPPER HEATPIPE, SINTERED, WATER,3.2mmX 13.88mmX400mm	Flat	18W @ 400mm	15.748in (400mm)	-	COPPER
126152	FLATTENED,COPPER HEATPIPE, SINTERED, WATER,3.2mmX 13.88mmX450mm	Flat	16W @ 450mm	17.717in (450mm)	-	COPPER
126153	FLATTENED,COPPER HEATPIPE, SINTERED, WATER,3.2mmX 13.88mmX500mm	Flat	14W @ 500mm	19.685in (500mm)	-	COPPER
126154	FLATTENED,COPPER HEATPIPE, SINTERED, WATER,3.2mmX 13.88mmX550mm	Flat	13W @ 550mm	21.654in (550mm)	-	COPPER
126155	FLATTENED,COPPER HEATPIPE, SINTERED, WATER,3.2mmX 13.88mmX600mm	Flat	12W @ 600mm	23.622in (600mm)	-	COPPER
126156	FLATTENED,COPPER HEATPIPE, SINTERED, WATER,3.2mmX 17.02mmX70mm	Flat	83W @ 70mm	2.756in (70mm)	-	COPPER
126157	FLATTENED,COPPER HEATPIPE, SINTERED, WATER,3.2mmX 17.02mmX100mm	Flat	71W @ 100mm	3.937in (100mm)	-	COPPER
126158	FLATTENED,COPPER HEATPIPE, SINTERED, WATER,3.2mmX 17.02mmX150mm	Flat	47W @ 150mm	5.906in (150mm)	-	COPPER
126159	FLATTENED,COPPER HEATPIPE, SINTERED, WATER,3.2mmX 17.02mmX200mm	Flat	35W @ 200mm	7.874in (200mm)	-	COPPER
126160	FLATTENED,COPPER HEATPIPE, SINTERED, WATER,3.2mmX 17.02mmX250mm	Flat	28W @ 250mm	9.843in (250mm)	-	COPPER
126161	FLATTENED,COPPER HEATPIPE, SINTERED, WATER,3.2mmX 17.02mmX300mm	Flat	23W @ 300mm	11.811in (300mm)	-	COPPER
126162	FLATTENED,COPPER HEATPIPE, SINTERED, WATER,3.2mmX 17.02mmX350mm	Flat	20W @ 350mm	13.78in (350mm)	-	COPPER
126163	FLATTENED,COPPER HEATPIPE, SINTERED, WATER,3.2mmX 17.02mmX400mm	Flat	17W @ 400mm	15.748in (400mm)	-	COPPER
126164	FLATTENED,COPPER HEATPIPE, SINTERED, WATER,3.2mmX 17.02mmX450mm	Flat	15W @ 450mm	17.717in (450mm)	-	COPPER

Part #	Description	Shape	Power - Cooling	Length	Diameter	Material
126165	FLATTENED,COPPER HEATPIPE, SINTERED, WATER,3.2mmX 17.02mmX500mm	Flat	13W @ 500mm	19.685in (500mm)	-	COPPER
126166	FLATTENED,COPPER HEATPIPE, SINTERED, WATER,3.2mmX 17.02mmX550mm	Flat	13W @ 550mm	21.654in (550mm)	-	COPPER
126167	FLATTENED,COPPER HEATPIPE, SINTERED, WATER,3.2mmX 17.02mmX600mm	Flat	11W @ 600mm	23.622in (600mm)	-	COPPER
126168	FLATTENED,COPPER HEATPIPE, SINTERED, WATER,3.5mmX 4.29mmX70mm	Flat	71W @ 70mm	2.756in (70mm)	-	COPPER
126169	FLATTENED,COPPER HEATPIPE, SINTERED, WATER,3.5mmX 4.29mmX100mm	Flat	49W @ 100mm	3.937in (100mm)	-	COPPER
126170	FLATTENED,COPPER HEATPIPE, SINTERED, WATER,3.5mmX 4.29mmX150mm	Flat	33W @ 150mm	5.906in (150mm)	-	COPPER
126171	FLATTENED,COPPER HEATPIPE, SINTERED, WATER,3.5mmX 4.29mmX200mm	Flat	24W @ 200mm	7.874in (200mm)	-	COPPER
126172	FLATTENED,COPPER HEATPIPE, SINTERED, WATER,3.5mmX 5.86mmX70mm	Flat	21W @ 70mm	2.756in (70mm)	-	COPPER
126173	FLATTENED,COPPER HEATPIPE, SINTERED, WATER,3.5mmX 5.86mmX100mm	Flat	18W @ 100mm	3.937in (100mm)	-	COPPER
126174	FLATTENED,COPPER HEATPIPE, SINTERED, WATER,3.5mmX 5.86mmX150mm	Flat	92W @ 150mm	5.906in (150mm)	-	COPPER
126175	FLATTENED,COPPER HEATPIPE, SINTERED, WATER,3.5mmX 5.86mmX200mm	Flat	65W @ 200mm	7.874in (200mm)	-	COPPER
126176	FLATTENED,COPPER HEATPIPE, SINTERED, WATER,3.5mmX 5.86mmX250mm	Flat	43W @ 250mm	9.843in (250mm)	-	COPPER
126177	FLATTENED,COPPER HEATPIPE, SINTERED, WATER,3.5mmX 5.86mmX300mm	Flat	30W @ 300mm	11.811in (300mm)	-	COPPER
126178	FLATTENED,COPPER HEATPIPE, SINTERED, WATER,3.5mmX 5.86mmX350mm	Flat	25W @ 350mm	13.78in (350mm)	-	COPPER
126179	FLATTENED,COPPER HEATPIPE, SINTERED, WATER,3.5mmX 7.43mmX70mm	Flat	103W @ 70mm	2.756in (70mm)	-	COPPER
126180	FLATTENED,COPPER HEATPIPE, SINTERED, WATER,3.5mmX 7.43mmX100mm	Flat	71W @ 100mm	3.937in (100mm)	-	COPPER
126181	FLATTENED,COPPER HEATPIPE, SINTERED, WATER,3.5mmX 7.43mmX150mm	Flat	47W @ 150mm	5.906in (150mm)	-	COPPER
126182	FLATTENED,COPPER HEATPIPE, SINTERED, WATER,3.5mmX 7.43mmX200mm	Flat	34W @ 200mm	7.874in (200mm)	-	COPPER
126183	FLATTENED,COPPER HEATPIPE, SINTERED, WATER,3.5mmX 7.43mmX250mm	Flat	28W @ 250mm	9.843in (250mm)	-	COPPER
126184	FLATTENED,COPPER HEATPIPE, SINTERED, WATER,3.5mmX 7.43mmX300mm	Flat	24W @ 300mm	11.811in (300mm)	-	COPPER
126185	FLATTENED,COPPER HEATPIPE, SINTERED, WATER,3.5mmX 7.43mmX350mm	Flat	20W @ 350mm	13.78in (350mm)	-	COPPER
126186	FLATTENED,COPPER HEATPIPE, SINTERED, WATER,3.5mmX 7.43mmX400mm	Flat	17W @ 400mm	15.748in (400mm)	-	COPPER
126187	FLATTENED,COPPER HEATPIPE, SINTERED, WATER,3.5mmX 10.57mmX70mm	Flat	111W @ 70mm	2.756in (70mm)	-	COPPER
126188	FLATTENED,COPPER HEATPIPE, SINTERED, WATER,3.5mmX 10.57mmX100mm	Flat	78W @ 100mm	3.937in (100mm)	-	COPPER
126189	FLATTENED,COPPER HEATPIPE, SINTERED, WATER,3.5mmX 10.57mmX150mm	Flat	51W @ 150mm	5.906in (150mm)	-	COPPER

Part #	Description	Shape	Power - Cooling	Length	Diameter	Material
126190	FLATTENED,COPPER HEATPIPE, SINTERED, WATER,3.5mmX 10.57mmX200mm	Flat	39W @ 200mm	7.874in (200mm)	-	COPPER
126191	FLATTENED,COPPER HEATPIPE, SINTERED, WATER,3.5mmX 10.57mmX250mm	Flat	30W @ 250mm	9.843in (250mm)	-	COPPER
126192	FLATTENED,COPPER HEATPIPE, SINTERED, WATER,3.5mmX 10.57mmX300mm	Flat	25W @ 300mm	11.811in (300mm)	-	COPPER
126193	FLATTENED,COPPER HEATPIPE, SINTERED, WATER,3.5mmX 10.57mmX350mm	Flat	22W @ 350mm	13.78in (350mm)	-	COPPER
126194	FLATTENED,COPPER HEATPIPE, SINTERED, WATER,3.5mmX 10.57mmX400mm	Flat	19W @ 400mm	15.748in (400mm)	-	COPPER
126195	FLATTENED,COPPER HEATPIPE, SINTERED, WATER,3.5mmX 10.57mmX450mm	Flat	17W @ 450mm	17.717in (450mm)	-	COPPER
126196	FLATTENED,COPPER HEATPIPE, SINTERED, WATER,3.5mmX 10.57mmX500mm	Flat	15W @ 500mm	19.685in (500mm)	-	COPPER
126197	FLATTENED,COPPER HEATPIPE, SINTERED, WATER,3.5mmX 13.71mmX70mm	Flat	93W @ 70mm	2.756in (70mm)	-	COPPER
126198	FLATTENED,COPPER HEATPIPE, SINTERED, WATER,3.5mmX 13.71mmX100mm	Flat	80W @ 100mm	3.937in (100mm)	-	COPPER
126199	FLATTENED,COPPER HEATPIPE, SINTERED, WATER,3.5mmX 13.71mmX150mm	Flat	53W @ 150mm	5.906in (150mm)	-	COPPER
126200	FLATTENED,COPPER HEATPIPE, SINTERED, WATER,3.5mmX 13.71mmX200mm	Flat	39W @ 200mm	7.874in (200mm)	-	COPPER
126201	FLATTENED,COPPER HEATPIPE, SINTERED, WATER,3.5mmX 13.71mmX250mm	Flat	31W @ 250mm	9.843in (250mm)	-	COPPER
126202	FLATTENED,COPPER HEATPIPE, SINTERED, WATER,3.5mmX 13.71mmX300mm	Flat	26W @ 300mm	11.811in (300mm)	-	COPPER
126203	FLATTENED,COPPER HEATPIPE, SINTERED, WATER,3.5mmX 13.71mmX350mm	Flat	22W @ 350mm	13.78in (350mm)	-	COPPER
126204	FLATTENED,COPPER HEATPIPE, SINTERED, WATER,3.5mmX 13.71mmX400mm	Flat	19W @ 400mm	15.748in (400mm)	-	COPPER
126205	FLATTENED,COPPER HEATPIPE, SINTERED, WATER,3.5mmX 13.71mmX450mm	Flat	17W @ 450mm	17.717in (450mm)	-	COPPER
126206	FLATTENED,COPPER HEATPIPE, SINTERED, WATER,3.5mmX 13.71mmX500mm	Flat	15W @ 500mm	19.685in (500mm)	-	COPPER
126207	FLATTENED,COPPER HEATPIPE, SINTERED, WATER,3.5mmX 13.71mmX550mm	Flat	14W @ 550mm	21.654in (550mm)	-	COPPER
126208	FLATTENED,COPPER HEATPIPE, SINTERED, WATER,3.5mmX 13.71mmX600mm	Flat	13W @ 600mm	23.622in (600mm)	-	COPPER
126209	FLATTENED,COPPER HEATPIPE, SINTERED, WATER,3.5mmX 16.85mmX70mm	Flat	91W @ 70mm	2.756in (70mm)	-	COPPER
126210	FLATTENED,COPPER HEATPIPE, SINTERED, WATER,3.5mmX 16.85mmX100mm	Flat	78W @ 100mm	3.937in (100mm)	-	COPPER
126211	FLATTENED,COPPER HEATPIPE, SINTERED, WATER,3.5mmX 16.85mmX150mm	Flat	52W @ 150mm	5.906in (150mm)	-	COPPER
126212	FLATTENED,COPPER HEATPIPE, SINTERED, WATER,3.5mmX 16.85mmX200mm	Flat	39W @ 200mm	7.874in (200mm)	-	COPPER
126213	FLATTENED,COPPER HEATPIPE, SINTERED, WATER,3.5mmX 16.85mmX250mm	Flat	31W @ 250mm	9.843in (250mm)	-	COPPER
126214	FLATTENED,COPPER HEATPIPE, SINTERED, WATER,3.5mmX 16.85mmX300mm	Flat	26W @ 300mm	11.811in (300mm)	-	COPPER

Part #	Description	Shape	Power - Cooling	Length	Diameter	Material
126215	FLATTENED,COPPER HEATPIPE, SINTERED, WATER,3.5mmX 16.85mmX350mm	Flat	22W @ 350mm	13.78in (350mm)	-	COPPER
126216	FLATTENED,COPPER HEATPIPE, SINTERED, WATER,3.5mmX 16.85mmX400mm	Flat	19W @ 400mm	15.748in (400mm)	-	COPPER
126217	FLATTENED,COPPER HEATPIPE, SINTERED, WATER,3.5mmX 16.85mmX450mm	Flat	17W @ 450mm	17.717in (450mm)	-	COPPER
126218	FLATTENED,COPPER HEATPIPE, SINTERED, WATER,3.5mmX 16.85mmX500mm	Flat	15W @ 500mm	19.685in (500mm)	-	COPPER
126219	FLATTENED,COPPER HEATPIPE, SINTERED, WATER,3.5mmX 16.85mmX550mm	Flat	14W @ 550mm	21.654in (550mm)	-	COPPER
126220	FLATTENED,COPPER HEATPIPE, SINTERED, WATER,3.5mmX 16.85mmX600mm	Flat	12W @ 600mm	23.622in (600mm)	-	COPPER
126221	FLATTENED,COPPER HEATPIPE, SINTERED, WATER,4mmX 5.57mmX70mm	Flat	25W @ 70mm	2.756in (70mm)	-	COPPER
126222	FLATTENED,COPPER HEATPIPE, SINTERED, WATER,4mmX 5.57mmX100mm	Flat	20W @ 100mm	3.937in (100mm)	-	COPPER
126223	FLATTENED,COPPER HEATPIPE, SINTERED, WATER,4mmX 5.57mmX150mm	Flat	105W @ 150mm	5.906in (150mm)	-	COPPER
126224	FLATTENED,COPPER HEATPIPE, SINTERED, WATER,4mmX 5.57mmX200mm	Flat	74W @ 200mm	7.874in (200mm)	-	COPPER
126225	FLATTENED,COPPER HEATPIPE, SINTERED, WATER,4mmX 5.57mmX250mm	Flat	49W @ 250mm	9.843in (250mm)	-	COPPER
126226	FLATTENED,COPPER HEATPIPE, SINTERED, WATER,4mmX 5.57mmX300mm	Flat	34W @ 300mm	11.811in (300mm)	-	COPPER
126227	FLATTENED,COPPER HEATPIPE, SINTERED, WATER,4mmX 5.57mmX350mm	Flat	29W @ 350mm	13.78in (350mm)	-	COPPER
126228	FLATTENED,COPPER HEATPIPE, SINTERED, WATER,4mmX 7.14mmX70mm	Flat	117W @ 70mm	2.756in (70mm)	-	COPPER
126229	FLATTENED,COPPER HEATPIPE, SINTERED, WATER,4mmX 7.14mmX100mm	Flat	82W @ 100mm	3.937in (100mm)	-	COPPER
126230	FLATTENED,COPPER HEATPIPE, SINTERED, WATER,4mmX 7.14mmX150mm	Flat	54W @ 150mm	5.906in (150mm)	-	COPPER
126231	FLATTENED,COPPER HEATPIPE, SINTERED, WATER,4mmX 7.14mmX200mm	Flat	39W @ 200mm	7.874in (200mm)	-	COPPER
126232	FLATTENED,COPPER HEATPIPE, SINTERED, WATER,4mmX 7.14mmX250mm	Flat	32W @ 250mm	9.843in (250mm)	-	COPPER
126233	FLATTENED,COPPER HEATPIPE, SINTERED, WATER,4mmX 7.14mmX300mm	Flat	27W @ 300mm	11.811in (300mm)	-	COPPER
126234	FLATTENED,COPPER HEATPIPE, SINTERED, WATER,4mmX 7.14mmX350mm	Flat	23W @ 350mm	13.78in (350mm)	-	COPPER
126235	FLATTENED,COPPER HEATPIPE, SINTERED, WATER,4mmX 7.14mmX400mm	Flat	20W @ 400mm	15.748in (400mm)	-	COPPER
126236	FLATTENED,COPPER HEATPIPE, SINTERED, WATER,4mmX 10.28mmX70mm	Flat	127W @ 70mm	2.756in (70mm)	-	COPPER
126237	FLATTENED,COPPER HEATPIPE, SINTERED, WATER,4mmX 10.28mmX100mm	Flat	89W @ 100mm	3.937in (100mm)	-	COPPER
126238	FLATTENED,COPPER HEATPIPE, SINTERED, WATER,4mmX 10.28mmX150mm	Flat	59W @ 150mm	5.906in (150mm)	-	COPPER
126239	FLATTENED,COPPER HEATPIPE, SINTERED, WATER,4mmX 10.28mmX200mm	Flat	44W @ 200mm	7.874in (200mm)	-	COPPER

Part #	Description	Shape	Power - Cooling	Length	Diameter	Material
126240	FLATTENED,COPPER HEATPIPE, SINTERED, WATER,4mmX 10.28mmX250mm	Flat	35W @ 250mm	9.843in (250mm)	-	COPPER
126241	FLATTENED,COPPER HEATPIPE, SINTERED, WATER,4mmX 10.28mmX300mm	Flat	29W @ 300mm	11.811in (300mm)	-	COPPER
126242	FLATTENED,COPPER HEATPIPE, SINTERED, WATER,4mmX 10.28mmX350mm	Flat	25W @ 350mm	13.78in (350mm)	-	COPPER
126243	FLATTENED,COPPER HEATPIPE, SINTERED, WATER,4mmX 10.28mmX400mm	Flat	22W @ 400mm	15.748in (400mm)	-	COPPER
126244	FLATTENED,COPPER HEATPIPE, SINTERED, WATER,4mmX 10.28mmX450mm	Flat	19W @ 450mm	17.717in (450mm)	-	COPPER
126245	FLATTENED,COPPER HEATPIPE, SINTERED, WATER,4mmX 10.28mmX500mm	Flat	17W @ 500mm	19.685in (500mm)	-	COPPER
126246	FLATTENED,COPPER HEATPIPE, SINTERED, WATER,4mmX 13.42mmX70mm	Flat	106W @ 70mm	2.756in (70mm)	-	COPPER
126247	FLATTENED,COPPER HEATPIPE, SINTERED, WATER,4mmX 13.42mmX100mm	Flat	91W @ 100mm	3.937in (100mm)	-	COPPER
126248	FLATTENED,COPPER HEATPIPE, SINTERED, WATER,4mmX 13.42mmX150mm	Flat	61W @ 150mm	5.906in (150mm)	-	COPPER
126249	FLATTENED,COPPER HEATPIPE, SINTERED, WATER,4mmX 13.42mmX200mm	Flat	45W @ 200mm	7.874in (200mm)	-	COPPER
126250	FLATTENED,COPPER HEATPIPE, SINTERED, WATER,4mmX 13.42mmX250mm	Flat	36W @ 250mm	9.843in (250mm)	-	COPPER
126251	FLATTENED,COPPER HEATPIPE, SINTERED, WATER,4mmX 13.42mmX300mm	Flat	30W @ 300mm	11.811in (300mm)	-	COPPER
126252	FLATTENED,COPPER HEATPIPE, SINTERED, WATER,4mmX 13.42mmX350mm	Flat	26W @ 350mm	13.78in (350mm)	-	COPPER
126253	FLATTENED,COPPER HEATPIPE, SINTERED, WATER,4mmX 13.42mmX400mm	Flat	22W @ 400mm	15.748in (400mm)	-	COPPER
126254	FLATTENED,COPPER HEATPIPE, SINTERED, WATER,4mmX 13.42mmX450mm	Flat	20W @ 450mm	17.717in (450mm)	-	COPPER
126255	FLATTENED,COPPER HEATPIPE, SINTERED, WATER,4mmX 13.42mmX500mm	Flat	18W @ 500mm	19.685in (500mm)	-	COPPER
126256	FLATTENED,COPPER HEATPIPE, SINTERED, WATER,4mmX 13.42mmX550mm	Flat	16W @ 550mm	21.654in (550mm)	-	COPPER
126257	FLATTENED,COPPER HEATPIPE, SINTERED, WATER,4mmX 13.42mmX600mm	Flat	15W @ 600mm	23.622in (600mm)	-	COPPER
126258	FLATTENED,COPPER HEATPIPE, SINTERED, WATER,4mmX 16.57mmX70mm	Flat	104W @ 70mm	2.756in (70mm)	-	COPPER
126259	FLATTENED,COPPER HEATPIPE, SINTERED, WATER,4mmX 16.57mmX100mm	Flat	89W @ 100mm	3.937in (100mm)	-	COPPER
126260	FLATTENED,COPPER HEATPIPE, SINTERED, WATER,4mmX 16.57mmX150mm	Flat	59W @ 150mm	5.906in (150mm)	-	COPPER
126261	FLATTENED,COPPER HEATPIPE, SINTERED, WATER,4mmX 16.57mmX200mm	Flat	44W @ 200mm	7.874in (200mm)	-	COPPER
126262	FLATTENED,COPPER HEATPIPE, SINTERED, WATER,4mmX 16.57mmX250mm	Flat	35W @ 250mm	9.843in (250mm)	-	COPPER
126263	FLATTENED,COPPER HEATPIPE, SINTERED, WATER,4mmX 16.57mmX300mm	Flat	32W @ 300mm	11.811in (300mm)	-	COPPER
126264	FLATTENED,COPPER HEATPIPE, SINTERED, WATER,4mmX 16.57mmX350mm	Flat	25W @ 350mm	13.78in (350mm)	-	COPPER

Part #	Description	Shape	Power - Cooling	Length	Diameter	Material
126265	FLATTENED,COPPER HEATPIPE, SINTERED, WATER,4mmX 16.57mmX400mm	Flat	22W @ 400mm	15.748in (400mm)	-	COPPER
126266	FLATTENED,COPPER HEATPIPE, SINTERED, WATER,4mmX 16.57mmX450mm	Flat	19W @ 450mm	17.717in (450mm)	-	COPPER
126267	FLATTENED,COPPER HEATPIPE, SINTERED, WATER,4mmX 16.57mmX500mm	Flat	17W @ 500mm	19.685in (500mm)	-	COPPER
126268	FLATTENED,COPPER HEATPIPE, SINTERED, WATER,4mmX 16.57mmX550mm	Flat	16W @ 550mm	21.654in (550mm)	-	COPPER
126269	FLATTENED,COPPER HEATPIPE, SINTERED, WATER,4mmX 16.57mmX600mm	Flat	14W @ 600mm	23.622in (600mm)	-	COPPER
126270	FLATTENED,COPPER HEATPIPE, SINTERED, WATER,4.2mmX 5.46mmX70mm	Flat	26W @ 70mm	2.756in (70mm)	-	COPPER
126271	FLATTENED,COPPER HEATPIPE, SINTERED, WATER,4.2mmX 5.46mmX100mm	Flat	21W @ 100mm	3.937in (100mm)	-	COPPER
126272	FLATTENED,COPPER HEATPIPE, SINTERED, WATER,4.2mmX 5.46mmX150mm	Flat	111W @ 150mm	5.906in (150mm)	-	COPPER
126273	FLATTENED,COPPER HEATPIPE, SINTERED, WATER,4.2mmX 5.46mmX200mm	Flat	78W @ 200mm	7.874in (200mm)	-	COPPER
126274	FLATTENED,COPPER HEATPIPE, SINTERED, WATER,4.2mmX 5.46mmX250mm	Flat	51W @ 250mm	9.843in (250mm)	-	COPPER
126275	FLATTENED,COPPER HEATPIPE, SINTERED, WATER,4.2mmX 5.46mmX300mm	Flat	36W @ 300mm	11.811in (300mm)	-	COPPER
126276	FLATTENED,COPPER HEATPIPE, SINTERED, WATER,4.2mmX 5.46mmX350mm	Flat	30W @ 350mm	13.78in (350mm)	-	COPPER
126277	FLATTENED,COPPER HEATPIPE, SINTERED, WATER,4.2mmX 7.03mmX70mm	Flat	123W @ 70mm	2.756in (70mm)	-	COPPER
126278	FLATTENED,COPPER HEATPIPE, SINTERED, WATER,4.2mmX 7.03mmX100mm	Flat	86W @ 100mm	3.937in (100mm)	-	COPPER
126279	FLATTENED,COPPER HEATPIPE, SINTERED, WATER,4.2mmX 7.03mmX150mm	Flat	57W @ 150mm	5.906in (150mm)	-	COPPER
126280	FLATTENED,COPPER HEATPIPE, SINTERED, WATER,4.2mmX 7.03mmX200mm	Flat	41W @ 200mm	7.874in (200mm)	-	COPPER
126281	FLATTENED,COPPER HEATPIPE, SINTERED, WATER,4.2mmX 7.03mmX250mm	Flat	34W @ 250mm	9.843in (250mm)	-	COPPER
126282	FLATTENED,COPPER HEATPIPE, SINTERED, WATER,4.2mmX 7.03mmX300mm	Flat	28W @ 300mm	11.811in (300mm)	-	COPPER
126283	FLATTENED,COPPER HEATPIPE, SINTERED, WATER,4.2mmX 7.03mmX350mm	Flat	24W @ 350mm	13.78in (350mm)	-	COPPER
126284	FLATTENED,COPPER HEATPIPE, SINTERED, WATER,4.2mmX 7.03mmX400mm	Flat	21W @ 400mm	15.748in (400mm)	-	COPPER
126285	FLATTENED,COPPER HEATPIPE, SINTERED, WATER,4.2mmX 10.17mmX70mm	Flat	134W @ 70mm	2.756in (70mm)	-	COPPER
126286	FLATTENED,COPPER HEATPIPE, SINTERED, WATER,4.2mmX 10.17mmX100mm	Flat	93W @ 100mm	3.937in (100mm)	-	COPPER
126287	FLATTENED,COPPER HEATPIPE, SINTERED, WATER,4.2mmX 10.17mmX150mm	Flat	62W @ 150mm	5.906in (150mm)	-	COPPER
126288	FLATTENED,COPPER HEATPIPE, SINTERED, WATER,4.2mmX 10.17mmX200mm	Flat	46W @ 200mm	7.874in (200mm)	-	COPPER
126289	FLATTENED,COPPER HEATPIPE, SINTERED, WATER,4.2mmX 10.17mmX250mm	Flat	37W @ 250mm	9.843in (250mm)	-	COPPER

Part #	Description	Shape	Power - Cooling	Length	Diameter	Material
126290	FLATTENED,COPPER HEATPIPE, SINTERED, WATER,4.2mmX 10.17mmX300mm	Flat	30W @ 300mm	11.811in (300mm)	-	COPPER
126291	FLATTENED,COPPER HEATPIPE, SINTERED, WATER,4.2mmX 10.17mmX350mm	Flat	26W @ 350mm	13.78in (350mm)	-	COPPER
126292	FLATTENED,COPPER HEATPIPE, SINTERED, WATER,4.2mmX 10.17mmX400mm	Flat	23W @ 400mm	15.748in (400mm)	-	COPPER
126293	FLATTENED,COPPER HEATPIPE, SINTERED, WATER,4.2mmX 10.17mmX450mm	Flat	20W @ 450mm	17.717in (450mm)	-	COPPER
126294	FLATTENED,COPPER HEATPIPE, SINTERED, WATER,4.2mmX 10.17mmX500mm	Flat	18W @ 500mm	19.685in (500mm)	-	COPPER
126295	FLATTENED,COPPER HEATPIPE, SINTERED, WATER,4.2mmX 13.31mmX70mm	Flat	111W @ 70mm	2.756in (70mm)	-	COPPER
126296	FLATTENED,COPPER HEATPIPE, SINTERED, WATER,4.2mmX 13.31mmX100mm	Flat	96W @ 100mm	3.937in (100mm)	-	COPPER
126297	FLATTENED,COPPER HEATPIPE, SINTERED, WATER,4.2mmX 13.31mmX150mm	Flat	64W @ 150mm	5.906in (150mm)	-	COPPER
126298	FLATTENED,COPPER HEATPIPE, SINTERED, WATER,4.2mmX 13.31mmX200mm	Flat	47W @ 200mm	7.874in (200mm)	-	COPPER
126299	FLATTENED,COPPER HEATPIPE, SINTERED, WATER,4.2mmX 13.31mmX250mm	Flat	38W @ 250mm	9.843in (250mm)	-	COPPER
126300	FLATTENED,COPPER HEATPIPE, SINTERED, WATER,4.2mmX 13.31mmX300mm	Flat	32W @ 300mm	11.811in (300mm)	-	COPPER
126301	FLATTENED,COPPER HEATPIPE, SINTERED, WATER,4.2mmX 13.31mmX350mm	Flat	27W @ 350mm	13.78in (350mm)	-	COPPER
126302	FLATTENED,COPPER HEATPIPE, SINTERED, WATER,4.2mmX 13.31mmX400mm	Flat	23W @ 400mm	15.748in (400mm)	-	COPPER
126303	FLATTENED,COPPER HEATPIPE, SINTERED, WATER,4.2mmX 13.31mmX450mm	Flat	21W @ 450mm	17.717in (450mm)	-	COPPER
126304	FLATTENED,COPPER HEATPIPE, SINTERED, WATER,4.2mmX 13.31mmX500mm	Flat	18W @ 500mm	19.685in (500mm)	-	COPPER
126305	FLATTENED,COPPER HEATPIPE, SINTERED, WATER,4.2mmX 13.31mmX550mm	Flat	17W @ 550mm	21.654in (550mm)	-	COPPER
126306	FLATTENED,COPPER HEATPIPE, SINTERED, WATER,4.2mmX 13.31mmX600mm	Flat	15W @ 600mm	23.622in (600mm)	-	COPPER
126307	FLATTENED,COPPER HEATPIPE, SINTERED, WATER,4.2mmX 16.45mmX70mm	Flat	109W @ 70mm	2.756in (70mm)	-	COPPER
126308	FLATTENED,COPPER HEATPIPE, SINTERED, WATER,4.2mmX 16.45mmX100mm	Flat	94W @ 100mm	3.937in (100mm)	-	COPPER
126309	FLATTENED,COPPER HEATPIPE, SINTERED, WATER,4.2mmX 16.45mmX150mm	Flat	62W @ 150mm	5.906in (150mm)	-	COPPER
126310	FLATTENED,COPPER HEATPIPE, SINTERED, WATER,4.2mmX 16.45mmX200mm	Flat	47W @ 200mm	7.874in (200mm)	-	COPPER
126311	FLATTENED,COPPER HEATPIPE, SINTERED, WATER,4.2mmX 16.45mmX250mm	Flat	37W @ 250mm	9.843in (250mm)	-	COPPER
126312	FLATTENED,COPPER HEATPIPE, SINTERED, WATER,4.2mmX 16.45mmX300mm	Flat	31W @ 300mm	11.811in (300mm)	-	COPPER
126313	FLATTENED,COPPER HEATPIPE, SINTERED, WATER,4.2mmX 16.45mmX350mm	Flat	26W @ 350mm	13.78in (350mm)	-	COPPER
126314	FLATTENED,COPPER HEATPIPE, SINTERED, WATER,4.2mmX 16.45mmX400mm	Flat	23W @ 400mm	15.748in (400mm)	-	COPPER

Part #	Description	Shape	Power - Cooling	Length	Diameter	Material
126315	FLATTENED,COPPER HEATPIPE, SINTERED, WATER,4.2mmX 16.45mmX450mm	Flat	20W @ 450mm	17.717in (450mm)	-	COPPER
126316	FLATTENED,COPPER HEATPIPE, SINTERED, WATER,4.2mmX 16.45mmX500mm	Flat	18W @ 500mm	19.685in (500mm)	-	COPPER
126317	FLATTENED,COPPER HEATPIPE, SINTERED, WATER,4.2mmX 16.45mmX550mm	Flat	17W @ 550mm	21.654in (550mm)	-	COPPER
126318	FLATTENED,COPPER HEATPIPE, SINTERED, WATER,4.2mmX 16.45mmX600mm	Flat	15W @ 600mm	23.622in (600mm)	-	COPPER
126319	FLATTENED,COPPER HEATPIPE, SINTERED, WATER,4.5mmX 5.29mmX70mm	Flat	28W @ 70mm	2.756in (70mm)	-	COPPER
126320	FLATTENED,COPPER HEATPIPE, SINTERED, WATER,4.5mmX 5.29mmX100mm	Flat	23W @ 100mm	3.937in (100mm)	-	COPPER
126321	FLATTENED,COPPER HEATPIPE, SINTERED, WATER,4.5mmX 5.29mmX150mm	Flat	119W @ 150mm	5.906in (150mm)	-	COPPER
126322	FLATTENED,COPPER HEATPIPE, SINTERED, WATER,4.5mmX 5.29mmX200mm	Flat	83W @ 200mm	7.874in (200mm)	-	COPPER
126323	FLATTENED,COPPER HEATPIPE, SINTERED, WATER,4.5mmX 5.29mmX250mm	Flat	55W @ 250mm	9.843in (250mm)	-	COPPER
126324	FLATTENED,COPPER HEATPIPE, SINTERED, WATER,4.5mmX 5.29mmX300mm	Flat	38W @ 300mm	11.811in (300mm)	-	COPPER
126325	FLATTENED,COPPER HEATPIPE, SINTERED, WATER,4.5mmX 5.29mmX350mm	Flat	33W @ 350mm	13.78in (350mm)	-	COPPER
126326	FLATTENED,COPPER HEATPIPE, SINTERED, WATER,4.5mmX 6.86mmX70mm	Flat	132W @ 70mm	2.756in (70mm)	-	COPPER
126327	FLATTENED,COPPER HEATPIPE, SINTERED, WATER,4.5mmX 6.86mmX100mm	Flat	92W @ 100mm	3.937in (100mm)	-	COPPER
126328	FLATTENED,COPPER HEATPIPE, SINTERED, WATER,4.5mmX 6.86mmX150mm	Flat	61W @ 150mm	5.906in (150mm)	-	COPPER
126329	FLATTENED,COPPER HEATPIPE, SINTERED, WATER,4.5mmX 6.86mmX200mm	Flat	44W @ 200mm	7.874in (200mm)	-	COPPER
126330	FLATTENED,COPPER HEATPIPE, SINTERED, WATER,4.5mmX 6.86mmX250mm	Flat	36W @ 250mm	9.843in (250mm)	-	COPPER
126331	FLATTENED,COPPER HEATPIPE, SINTERED, WATER,4.5mmX 6.86mmX300mm	Flat	31W @ 300mm	11.811in (300mm)	-	COPPER
126332	FLATTENED,COPPER HEATPIPE, SINTERED, WATER,4.5mmX 6.86mmX350mm	Flat	26W @ 350mm	13.78in (350mm)	-	COPPER
126333	FLATTENED,COPPER HEATPIPE, SINTERED, WATER,4.5mmX 6.86mmX400mm	Flat	22W @ 400mm	15.748in (400mm)	-	COPPER
126334	FLATTENED,COPPER HEATPIPE, SINTERED, WATER,4.5mmX 10mmX70mm	Flat	143W @ 70mm	2.756in (70mm)	-	COPPER
121725	FLATTENED,COPPER HEATPIPE, SINTERED, WATER,4.5mmX 10mmX100mm	Flat	100W @ 100mm	3.937in (100mm)	-	COPPER
121726	FLATTENED,COPPER HEATPIPE, SINTERED, WATER,4.5mmX 10mmX150mm	Flat	66W @ 150mm	5.906in (150mm)	-	COPPER
121727	FLATTENED,COPPER HEATPIPE, SINTERED, WATER,4.5mmX 10mmX200mm	Flat	50W @ 200mm	7.874in (200mm)	-	COPPER
121728	FLATTENED,COPPER HEATPIPE, SINTERED, WATER,4.5mmX 10mmX250mm	Flat	39W @ 250mm	9.843in (250mm)	-	COPPER
121729	FLATTENED,COPPER HEATPIPE, SINTERED, WATER,4.5mmX 10mmX300mm	Flat	33W @ 300mm	11.811in (300mm)	-	COPPER

Part #	Description	Shape	Power - Cooling	Length	Diameter	Material
126340	FLATTENED,COPPER HEATPIPE, SINTERED, WATER,4.5mmX 10mmX350mm	Flat	28W @ 350mm	13.78in (350mm)	-	COPPER
126341	FLATTENED,COPPER HEATPIPE, SINTERED, WATER,4.5mmX 10mmX400mm	Flat	24W @ 400mm	15.748in (400mm)	-	COPPER
126342	FLATTENED,COPPER HEATPIPE, SINTERED, WATER,4.5mmX 10mmX450mm	Flat	22W @ 450mm	17.717in (450mm)	-	COPPER
126343	FLATTENED,COPPER HEATPIPE, SINTERED, WATER,4.5mmX 10mmX500mm	Flat	20W @ 500mm	19.685in (500mm)	-	COPPER
126344	FLATTENED,COPPER HEATPIPE, SINTERED, WATER,4.5mmX 13.14mmX70mm	Flat	119W @ 70mm	2.756in (70mm)	-	COPPER
126345	FLATTENED,COPPER HEATPIPE, SINTERED, WATER,4.5mmX 13.14mmX100mm	Flat	103W @ 100mm	3.937in (100mm)	-	COPPER
126346	FLATTENED,COPPER HEATPIPE, SINTERED, WATER,4.5mmX 13.14mmX150mm	Flat	68W @ 150mm	5.906in (150mm)	-	COPPER
126347	FLATTENED,COPPER HEATPIPE, SINTERED, WATER,4.5mmX 13.14mmX200mm	Flat	51W @ 200mm	7.874in (200mm)	-	COPPER
126348	FLATTENED,COPPER HEATPIPE, SINTERED, WATER,4.5mmX 13.14mmX250mm	Flat	40W @ 250mm	9.843in (250mm)	-	COPPER
126349	FLATTENED,COPPER HEATPIPE, SINTERED, WATER,4.5mmX 13.14mmX300mm	Flat	34W @ 300mm	11.811in (300mm)	-	COPPER
126350	FLATTENED,COPPER HEATPIPE, SINTERED, WATER,4.5mmX 13.14mmX350mm	Flat	29W @ 350mm	13.78in (350mm)	-	COPPER
126351	FLATTENED,COPPER HEATPIPE, SINTERED, WATER,4.5mmX 13.14mmX400mm	Flat	25W @ 400mm	15.748in (400mm)	-	COPPER
126352	FLATTENED,COPPER HEATPIPE, SINTERED, WATER,4.5mmX 13.14mmX450mm	Flat	22W @ 450mm	17.717in (450mm)	-	COPPER
126353	FLATTENED,COPPER HEATPIPE, SINTERED, WATER,4.5mmX 13.14mmX500mm	Flat	20W @ 500mm	19.685in (500mm)	-	COPPER
126354	FLATTENED,COPPER HEATPIPE, SINTERED, WATER,4.5mmX 13.14mmX550mm	Flat	18W @ 550mm	21.654in (550mm)	-	COPPER
126355	FLATTENED,COPPER HEATPIPE, SINTERED, WATER,4.5mmX 13.14mmX600mm	Flat	16W @ 600mm	23.622in (600mm)	-	COPPER
126356	FLATTENED,COPPER HEATPIPE, SINTERED, WATER,4.5mmX 16.28mmX70mm	Flat	117W @ 70mm	2.756in (70mm)	-	COPPER
126357	FLATTENED,COPPER HEATPIPE, SINTERED, WATER,4.5mmX 16.28mmX100mm	Flat	101W @ 100mm	3.937in (100mm)	-	COPPER
126358	FLATTENED,COPPER HEATPIPE, SINTERED, WATER,4.5mmX 16.28mmX150mm	Flat	67W @ 150mm	5.906in (150mm)	-	COPPER
126359	FLATTENED,COPPER HEATPIPE, SINTERED, WATER,4.5mmX 16.28mmX200mm	Flat	50W @ 200mm	7.874in (200mm)	-	COPPER
126360	FLATTENED,COPPER HEATPIPE, SINTERED, WATER,4.5mmX 16.28mmX250mm	Flat	40W @ 250mm	9.843in (250mm)	-	COPPER
126361	FLATTENED,COPPER HEATPIPE, SINTERED, WATER,4.5mmX 16.28mmX300mm	Flat	33W @ 300mm	11.811in (300mm)	-	COPPER
126362	FLATTENED,COPPER HEATPIPE, SINTERED, WATER,4.5mmX 16.28mmX350mm	Flat	28W @ 350mm	13.78in (350mm)	-	COPPER
126363	FLATTENED,COPPER HEATPIPE, SINTERED, WATER,4.5mmX 16.28mmX400mm	Flat	25W @ 400mm	15.748in (400mm)	-	COPPER
126364	FLATTENED,COPPER HEATPIPE, SINTERED, WATER,4.5mmX 16.28mmX450mm	Flat	22W @ 450mm	17.717in (450mm)	-	COPPER

Part #	Description	Shape	Power - Cooling	Length	Diameter	Material
126365	FLATTENED,COPPER HEATPIPE, SINTERED, WATER,4.5mmX 16.28mmX500mm	Flat	19W @ 500mm	19.685in (500mm)	-	COPPER
126366	FLATTENED,COPPER HEATPIPE, SINTERED, WATER,4.5mmX 16.28mmX550mm	Flat	18W @ 550mm	21.654in (550mm)	-	COPPER
126367	FLATTENED,COPPER HEATPIPE, SINTERED, WATER,4.5mmX 16.28mmX600mm	Flat	16W @ 600mm	23.622in (600mm)	-	COPPER
126368	FLATTENED,COPPER HEATPIPE, SINTERED, WATER,4.7mmX 5.17mmX70mm	Flat	29W @ 70mm	2.756in (70mm)	-	COPPER
126369	FLATTENED,COPPER HEATPIPE, SINTERED, WATER,4.7mmX 5.17mmX100mm	Flat	24W @ 100mm	3.937in (100mm)	-	COPPER
126370	FLATTENED,COPPER HEATPIPE, SINTERED, WATER,4.7mmX 5.17mmX150mm	Flat	124W @ 150mm	5.906in (150mm)	-	COPPER
126371	FLATTENED,COPPER HEATPIPE, SINTERED, WATER,4.7mmX 5.17mmX200mm	Flat	87W @ 200mm	7.874in (200mm)	-	COPPER
126372	FLATTENED,COPPER HEATPIPE, SINTERED, WATER,4.7mmX 5.17mmX250mm	Flat	57W @ 250mm	9.843in (250mm)	-	COPPER
126373	FLATTENED,COPPER HEATPIPE, SINTERED, WATER,4.7mmX 5.17mmX300mm	Flat	40W @ 300mm	11.811in (300mm)	-	COPPER
126374	FLATTENED,COPPER HEATPIPE, SINTERED, WATER,4.7mmX 5.17mmX350mm	Flat	34W @ 350mm	13.78in (350mm)	-	COPPER
126375	FLATTENED,COPPER HEATPIPE, SINTERED, WATER,4.7mmX 6.74mmX70mm	Flat	138W @ 70mm	2.756in (70mm)	-	COPPER
126376	FLATTENED,COPPER HEATPIPE, SINTERED, WATER,4.7mmX 6.74mmX100mm	Flat	96W @ 100mm	3.937in (100mm)	-	COPPER
126377	FLATTENED,COPPER HEATPIPE, SINTERED, WATER,4.7mmX 6.74mmX150mm	Flat	64W @ 150mm	5.906in (150mm)	-	COPPER
126378	FLATTENED,COPPER HEATPIPE, SINTERED, WATER,4.7mmX 6.74mmX200mm	Flat	46W @ 200mm	7.874in (200mm)	-	COPPER
126379	FLATTENED,COPPER HEATPIPE, SINTERED, WATER,4.7mmX 6.74mmX250mm	Flat	38W @ 250mm	9.843in (250mm)	-	COPPER
126380	FLATTENED,COPPER HEATPIPE, SINTERED, WATER,4.7mmX 6.74mmX300mm	Flat	32W @ 300mm	11.811in (300mm)	-	COPPER
126381	FLATTENED,COPPER HEATPIPE, SINTERED, WATER,4.7mmX 6.74mmX350mm	Flat	27W @ 350mm	13.78in (350mm)	-	COPPER
126382	FLATTENED,COPPER HEATPIPE, SINTERED, WATER,4.7mmX 6.74mmX400mm	Flat	23W @ 400mm	15.748in (400mm)	-	COPPER
126383	FLATTENED,COPPER HEATPIPE, SINTERED, WATER,4.7mmX 9.88mmX70mm	Flat	150W @ 70mm	2.756in (70mm)	-	COPPER
126384	FLATTENED,COPPER HEATPIPE, SINTERED, WATER,4.7mmX 9.88mmX100mm	Flat	104W @ 100mm	3.937in (100mm)	-	COPPER
126385	FLATTENED,COPPER HEATPIPE, SINTERED, WATER,4.7mmX 9.88mmX150mm	Flat	69W @ 150mm	5.906in (150mm)	-	COPPER
126386	FLATTENED,COPPER HEATPIPE, SINTERED, WATER,4.7mmX 9.88mmX200mm	Flat	52W @ 200mm	7.874in (200mm)	-	COPPER
126387	FLATTENED,COPPER HEATPIPE, SINTERED, WATER,4.7mmX 9.88mmX250mm	Flat	41W @ 250mm	9.843in (250mm)	-	COPPER
126388	FLATTENED,COPPER HEATPIPE, SINTERED, WATER,4.7mmX 9.88mmX300mm	Flat	34W @ 300mm	11.811in (300mm)	-	COPPER
126389	FLATTENED,COPPER HEATPIPE, SINTERED, WATER,4.7mmX 9.88mmX350mm	Flat	29W @ 350mm	13.78in (350mm)	-	COPPER

Part #	Description	Shape	Power - Cooling	Length	Diameter	Material
126390	FLATTENED,COPPER HEATPIPE, SINTERED, WATER,4.7mmX 9.88mmX400mm	Flat	25W @ 400mm	15.748in (400mm)	-	COPPER
126391	FLATTENED,COPPER HEATPIPE, SINTERED, WATER,4.7mmX 9.88mmX450mm	Flat	23W @ 450mm	17.717in (450mm)	-	COPPER
126392	FLATTENED,COPPER HEATPIPE, SINTERED, WATER,4.7mmX 9.88mmX500mm	Flat	21W @ 500mm	19.685in (500mm)	-	COPPER
126393	FLATTENED,COPPER HEATPIPE, SINTERED, WATER,4.7mmX 13.03mmX70mm	Flat	124W @ 70mm	2.756in (70mm)	-	COPPER
126394	FLATTENED,COPPER HEATPIPE, SINTERED, WATER,4.7mmX 13.03mmX100mm	Flat	107W @ 100mm	3.937in (100mm)	-	COPPER
126395	FLATTENED,COPPER HEATPIPE, SINTERED, WATER,4.7mmX 13.03mmX150mm	Flat	71W @ 150mm	5.906in (150mm)	-	COPPER
126396	FLATTENED,COPPER HEATPIPE, SINTERED, WATER,4.7mmX 13.03mmX200mm	Flat	53W @ 200mm	7.874in (200mm)	-	COPPER
126397	FLATTENED,COPPER HEATPIPE, SINTERED, WATER,4.7mmX 13.03mmX250mm	Flat	42W @ 250mm	9.843in (250mm)	-	COPPER
126398	FLATTENED,COPPER HEATPIPE, SINTERED, WATER,4.7mmX 13.03mmX300mm	Flat	35W @ 300mm	11.811in (300mm)	-	COPPER
126399	FLATTENED,COPPER HEATPIPE, SINTERED, WATER,4.7mmX 13.03mmX350mm	Flat	30W @ 350mm	13.78in (350mm)	-	COPPER
126400	FLATTENED,COPPER HEATPIPE, SINTERED, WATER,4.7mmX 13.03mmX400mm	Flat	26W @ 400mm	15.748in (400mm)	-	COPPER
126401	FLATTENED,COPPER HEATPIPE, SINTERED, WATER,4.7mmX 13.03mmX450mm	Flat	23W @ 450mm	17.717in (450mm)	-	COPPER
126402	FLATTENED,COPPER HEATPIPE, SINTERED, WATER,4.7mmX 13.03mmX500mm	Flat	21W @ 500mm	19.685in (500mm)	-	COPPER
126403	FLATTENED,COPPER HEATPIPE, SINTERED, WATER,4.7mmX 13.03mmX550mm	Flat	19W @ 550mm	21.654in (550mm)	-	COPPER
126404	FLATTENED,COPPER HEATPIPE, SINTERED, WATER,4.7mmX 13.03mmX600mm	Flat	17W @ 600mm	23.622in (600mm)	-	COPPER
126405	FLATTENED,COPPER HEATPIPE, SINTERED, WATER,4.7mmX 16.17mmX70mm	Flat	122W @ 70mm	2.756in (70mm)	-	COPPER
126406	FLATTENED,COPPER HEATPIPE, SINTERED, WATER,4.7mmX 16.17mmX100mm	Flat	105W @ 100mm	3.937in (100mm)	-	COPPER
126407	FLATTENED,COPPER HEATPIPE, SINTERED, WATER,4.7mmX 16.17mmX150mm	Flat	70W @ 150mm	5.906in (150mm)	-	COPPER
126408	FLATTENED,COPPER HEATPIPE, SINTERED, WATER,4.7mmX 16.17mmX200mm	Flat	52W @ 200mm	7.874in (200mm)	-	COPPER
126409	FLATTENED,COPPER HEATPIPE, SINTERED, WATER,4.7mmX 16.17mmX250mm	Flat	41W @ 250mm	9.843in (250mm)	-	COPPER
126410	FLATTENED,COPPER HEATPIPE, SINTERED, WATER,4.7mmX 16.17mmX300mm	Flat	34W @ 300mm	11.811in (300mm)	-	COPPER
126411	FLATTENED,COPPER HEATPIPE, SINTERED, WATER,4.7mmX 16.17mmX350mm	Flat	29W @ 350mm	13.78in (350mm)	-	COPPER
126412	FLATTENED,COPPER HEATPIPE, SINTERED, WATER,4.7mmX 16.17mmX400mm	Flat	26W @ 400mm	15.748in (400mm)	-	COPPER
126413	FLATTENED,COPPER HEATPIPE, SINTERED, WATER,4.7mmX 16.17mmX450mm	Flat	23W @ 450mm	17.717in (450mm)	-	COPPER
126414	FLATTENED,COPPER HEATPIPE, SINTERED, WATER,4.7mmX 16.17mmX500mm	Flat	20W @ 500mm	19.685in (500mm)	-	COPPER

Part #	Description	Shape	Power - Cooling	Length	Diameter	Material
126415	FLATTENED,COPPER HEATPIPE, SINTERED, WATER,4.7mmX 16.17mmX550mm	Flat	19W @ 550mm	21.654in (550mm)	-	COPPER
126416	FLATTENED,COPPER HEATPIPE, SINTERED, WATER,4.7mmX 16.17mmX600mm	Flat	17W @ 600mm	23.622in (600mm)	-	COPPER
126417	FLATTENED,COPPER HEATPIPE, SINTERED, WATER,5mmX 6.57mmX70mm	Flat	147W @ 70mm	2.756in (70mm)	-	COPPER
126418	FLATTENED,COPPER HEATPIPE, SINTERED, WATER,5mmX 6.57mmX100mm	Flat	102W @ 100mm	3.937in (100mm)	-	COPPER
126419	FLATTENED,COPPER HEATPIPE, SINTERED, WATER,5mmX 6.57mmX150mm	Flat	68W @ 150mm	5.906in (150mm)	-	COPPER
126420	FLATTENED,COPPER HEATPIPE, SINTERED, WATER,5mmX 6.57mmX200mm	Flat	49W @ 200mm	7.874in (200mm)	-	COPPER
126421	FLATTENED,COPPER HEATPIPE, SINTERED, WATER,5mmX 6.57mmX250mm	Flat	40W @ 250mm	9.843in (250mm)	-	COPPER
126422	FLATTENED,COPPER HEATPIPE, SINTERED, WATER,5mmX 6.57mmX300mm	Flat	34W @ 300mm	11.811in (300mm)	-	COPPER
126423	FLATTENED,COPPER HEATPIPE, SINTERED, WATER,5mmX 6.57mmX350mm	Flat	29W @ 350mm	13.78in (350mm)	-	COPPER
126424	FLATTENED,COPPER HEATPIPE, SINTERED, WATER,5mmX 6.57mmX400mm	Flat	25W @ 400mm	15.748in (400mm)	-	COPPER
126425	FLATTENED,COPPER HEATPIPE, SINTERED, WATER,5mmX 9.71mmX70mm	Flat	159W @ 70mm	2.756in (70mm)	-	COPPER
126426	FLATTENED,COPPER HEATPIPE, SINTERED, WATER,5mmX 9.71mmX100mm	Flat	111W @ 100mm	3.937in (100mm)	-	COPPER
126427	FLATTENED,COPPER HEATPIPE, SINTERED, WATER,5mmX 9.71mmX150mm	Flat	74W @ 150mm	5.906in (150mm)	-	COPPER
126428	FLATTENED,COPPER HEATPIPE, SINTERED, WATER,5mmX 9.71mmX200mm	Flat	55W @ 200mm	7.874in (200mm)	-	COPPER
126429	FLATTENED,COPPER HEATPIPE, SINTERED, WATER,5mmX 9.71mmX250mm	Flat	44W @ 250mm	9.843in (250mm)	-	COPPER
126430	FLATTENED,COPPER HEATPIPE, SINTERED, WATER,5mmX 9.71mmX300mm	Flat	36W @ 300mm	11.811in (300mm)	-	COPPER
126431	FLATTENED,COPPER HEATPIPE, SINTERED, WATER,5mmX 9.71mmX350mm	Flat	31W @ 350mm	13.78in (350mm)	-	COPPER
126432	FLATTENED,COPPER HEATPIPE, SINTERED, WATER,5mmX 9.71mmX400mm	Flat	27W @ 400mm	15.748in (400mm)	-	COPPER
126433	FLATTENED,COPPER HEATPIPE, SINTERED, WATER,5mmX 9.71mmX450mm	Flat	24W @ 450mm	17.717in (450mm)	-	COPPER
126434	FLATTENED,COPPER HEATPIPE, SINTERED, WATER,5mmX 9.71mmX500mm	Flat	22W @ 500mm	19.685in (500mm)	-	COPPER
126435	FLATTENED,COPPER HEATPIPE, SINTERED, WATER,5mmX 12.85mmX70mm	Flat	132W @ 70mm	2.756in (70mm)	-	COPPER
126436	FLATTENED,COPPER HEATPIPE, SINTERED, WATER,5mmX 12.85mmX100mm	Flat	114W @ 100mm	3.937in (100mm)	-	COPPER
126437	FLATTENED,COPPER HEATPIPE, SINTERED, WATER,5mmX 12.85mmX150mm	Flat	76W @ 150mm	5.906in (150mm)	-	COPPER
126438	FLATTENED,COPPER HEATPIPE, SINTERED, WATER,5mmX 12.85mmX200mm	Flat	57W @ 200mm	7.874in (200mm)	-	COPPER
126439	FLATTENED,COPPER HEATPIPE, SINTERED, WATER,5mmX 12.85mmX250mm	Flat	45W @ 250mm	9.843in (250mm)	-	COPPER

Part #	Description	Shape	Power - Cooling	Length	Diameter	Material
126440	FLATTENED,COPPER HEATPIPE, SINTERED, WATER,5mmX 12.85mmX300mm	Flat	38W @ 300mm	11.811in (300mm)	-	COPPER
126441	FLATTENED,COPPER HEATPIPE, SINTERED, WATER,5mmX 12.85mmX350mm	Flat	32W @ 350mm	13.78in (350mm)	-	COPPER
126442	FLATTENED,COPPER HEATPIPE, SINTERED, WATER,5mmX 12.85mmX400mm	Flat	28W @ 400mm	15.748in (400mm)	-	COPPER
126443	FLATTENED,COPPER HEATPIPE, SINTERED, WATER,5mmX 12.85mmX450mm	Flat	25W @ 450mm	17.717in (450mm)	-	COPPER
126444	FLATTENED,COPPER HEATPIPE, SINTERED, WATER,5mmX 12.85mmX500mm	Flat	22W @ 500mm	19.685in (500mm)	-	COPPER
126445	FLATTENED,COPPER HEATPIPE, SINTERED, WATER,5mmX 12.85mmX550mm	Flat	20W @ 550mm	21.654in (550mm)	-	COPPER
126446	FLATTENED,COPPER HEATPIPE, SINTERED, WATER,5mmX 12.85mmX600mm	Flat	18W @ 600mm	23.622in (600mm)	-	COPPER
126447	FLATTENED,COPPER HEATPIPE, SINTERED, WATER,5mmX 16mmX70mm	Flat	130W @ 70mm	2.756in (70mm)	-	COPPER
126448	FLATTENED,COPPER HEATPIPE, SINTERED, WATER,5mmX 16mmX100mm	Flat	112W @ 100mm	3.937in (100mm)	-	COPPER
126449	FLATTENED,COPPER HEATPIPE, SINTERED, WATER,5mmX 16mmX150mm	Flat	74W @ 150mm	5.906in (150mm)	-	COPPER
126450	FLATTENED,COPPER HEATPIPE, SINTERED, WATER,5mmX 16mmX200mm	Flat	55W @ 200mm	7.874in (200mm)	-	COPPER
126451	FLATTENED,COPPER HEATPIPE, SINTERED, WATER,5mmX 16mmX250mm	Flat	44W @ 250mm	9.843in (250mm)	-	COPPER
126452	FLATTENED,COPPER HEATPIPE, SINTERED, WATER,5mmX 16mmX300mm	Flat	40W @ 300mm	11.811in (300mm)	-	COPPER
126453	FLATTENED,COPPER HEATPIPE, SINTERED, WATER,5mmX 16mmX350mm	Flat	31W @ 350mm	13.78in (350mm)	-	COPPER
126454	FLATTENED,COPPER HEATPIPE, SINTERED, WATER,5mmX 16mmX400mm	Flat	27W @ 400mm	15.748in (400mm)	-	COPPER
126455	FLATTENED,COPPER HEATPIPE, SINTERED, WATER,5mmX 16mmX450mm	Flat	24W @ 450mm	17.717in (450mm)	-	COPPER
126456	FLATTENED,COPPER HEATPIPE, SINTERED, WATER,5mmX 16mmX500mm	Flat	21W @ 500mm	19.685in (500mm)	-	COPPER
126457	FLATTENED,COPPER HEATPIPE, SINTERED, WATER,5mmX 16mmX550mm	Flat	20W @ 550mm	21.654in (550mm)	-	COPPER
126458	FLATTENED,COPPER HEATPIPE, SINTERED, WATER,5mmX 16mmX600mm	Flat	18W @ 600mm	23.622in (600mm)	-	COPPER
126459	FLATTENED,COPPER HEATPIPE, SINTERED, WATER,5.2mmX 6.46mmX70mm	Flat	153W @ 70mm	2.756in (70mm)	-	COPPER
126460	FLATTENED,COPPER HEATPIPE, SINTERED, WATER,5.2mmX 6.46mmX100mm	Flat	106W @ 100mm	3.937in (100mm)	-	COPPER
126461	FLATTENED,COPPER HEATPIPE, SINTERED, WATER,5.2mmX 6.46mmX150mm	Flat	70W @ 150mm	5.906in (150mm)	-	COPPER
126462	FLATTENED,COPPER HEATPIPE, SINTERED, WATER,5.2mmX 6.46mmX200mm	Flat	51W @ 200mm	7.874in (200mm)	-	COPPER
126463	FLATTENED,COPPER HEATPIPE, SINTERED, WATER,5.2mmX 6.46mmX250mm	Flat	42W @ 250mm	9.843in (250mm)	-	COPPER
126464	FLATTENED,COPPER HEATPIPE, SINTERED, WATER,5.2mmX 6.46mmX300mm	Flat	35W @ 300mm	11.811in (300mm)	-	COPPER

Part #	Description	Shape	Power - Cooling	Length	Diameter	Material
126465	FLATTENED,COPPER HEATPIPE, SINTERED, WATER,5.2mmX 6.46mmX350mm	Flat	30W @ 350mm	13.78in (350mm)	-	COPPER
126466	FLATTENED,COPPER HEATPIPE, SINTERED, WATER,5.2mmX 6.46mmX400mm	Flat	26W @ 400mm	15.748in (400mm)	-	COPPER
126467	FLATTENED,COPPER HEATPIPE, SINTERED, WATER,5.2mmX 9.6mmX70mm	Flat	166W @ 70mm	2.756in (70mm)	-	COPPER
126468	FLATTENED,COPPER HEATPIPE, SINTERED, WATER,5.2mmX 9.6mmX100mm	Flat	116W @ 100mm	3.937in (100mm)	-	COPPER
126469	FLATTENED,COPPER HEATPIPE, SINTERED, WATER,5.2mmX 9.6mmX150mm	Flat	77W @ 150mm	5.906in (150mm)	-	COPPER
126470	FLATTENED,COPPER HEATPIPE, SINTERED, WATER,5.2mmX 9.6mmX200mm	Flat	58W @ 200mm	7.874in (200mm)	-	COPPER
126471	FLATTENED,COPPER HEATPIPE, SINTERED, WATER,5.2mmX 9.6mmX250mm	Flat	46W @ 250mm	9.843in (250mm)	-	COPPER
126472	FLATTENED,COPPER HEATPIPE, SINTERED, WATER,5.2mmX 9.6mmX300mm	Flat	38W @ 300mm	11.811in (300mm)	-	COPPER
126473	FLATTENED,COPPER HEATPIPE, SINTERED, WATER,5.2mmX 9.6mmX350mm	Flat	32W @ 350mm	13.78in (350mm)	-	COPPER
126474	FLATTENED,COPPER HEATPIPE, SINTERED, WATER,5.2mmX 9.6mmX400mm	Flat	28W @ 400mm	15.748in (400mm)	-	COPPER
126475	FLATTENED,COPPER HEATPIPE, SINTERED, WATER,5.2mmX 9.6mmX450mm	Flat	25W @ 450mm	17.717in (450mm)	-	COPPER
126476	FLATTENED,COPPER HEATPIPE, SINTERED, WATER,5.2mmX 9.6mmX500mm	Flat	23W @ 500mm	19.685in (500mm)	-	COPPER
126477	FLATTENED,COPPER HEATPIPE, SINTERED, WATER,5.2mmX 12.74mmX70mm	Flat	138W @ 70mm	2.756in (70mm)	-	COPPER
126478	FLATTENED,COPPER HEATPIPE, SINTERED, WATER,5.2mmX 12.74mmX100mm	Flat	119W @ 100mm	3.937in (100mm)	-	COPPER
126479	FLATTENED,COPPER HEATPIPE, SINTERED, WATER,5.2mmX 12.74mmX150mm	Flat	79W @ 150mm	5.906in (150mm)	-	COPPER
126480	FLATTENED,COPPER HEATPIPE, SINTERED, WATER,5.2mmX 12.74mmX200mm	Flat	59W @ 200mm	7.874in (200mm)	-	COPPER
126481	FLATTENED,COPPER HEATPIPE, SINTERED, WATER,5.2mmX 12.74mmX250mm	Flat	47W @ 250mm	9.843in (250mm)	-	COPPER
126482	FLATTENED,COPPER HEATPIPE, SINTERED, WATER,5.2mmX 12.74mmX300mm	Flat	39W @ 300mm	11.811in (300mm)	-	COPPER
126483	FLATTENED,COPPER HEATPIPE, SINTERED, WATER,5.2mmX 12.74mmX350mm	Flat	33W @ 350mm	13.78in (350mm)	-	COPPER
126484	FLATTENED,COPPER HEATPIPE, SINTERED, WATER,5.2mmX 12.74mmX400mm	Flat	29W @ 400mm	15.748in (400mm)	-	COPPER
126485	FLATTENED,COPPER HEATPIPE, SINTERED, WATER,5.2mmX 12.74mmX450mm	Flat	26W @ 450mm	17.717in (450mm)	-	COPPER
126486	FLATTENED,COPPER HEATPIPE, SINTERED, WATER,5.2mmX 12.74mmX500mm	Flat	23W @ 500mm	19.685in (500mm)	-	COPPER
126487	FLATTENED,COPPER HEATPIPE, SINTERED, WATER,5.2mmX 12.74mmX550mm	Flat	21W @ 550mm	21.654in (550mm)	-	COPPER
126488	FLATTENED,COPPER HEATPIPE, SINTERED, WATER,5.2mmX 12.74mmX600mm	Flat	19W @ 600mm	23.622in (600mm)	-	COPPER
126489	FLATTENED,COPPER HEATPIPE, SINTERED, WATER,5.2mmX 15.88mmX70mm	Flat	135W @ 70mm	2.756in (70mm)	-	COPPER

Part #	Description	Shape	Power - Cooling	Length	Diameter	Material
126490	FLATTENED,COPPER HEATPIPE, SINTERED, WATER,5.2mmX 15.88mmX100mm	Flat	116W @ 100mm	3.937in (100mm)	-	COPPER
126491	FLATTENED,COPPER HEATPIPE, SINTERED, WATER,5.2mmX 15.88mmX150mm	Flat	77W @ 150mm	5.906in (150mm)	-	COPPER
126492	FLATTENED,COPPER HEATPIPE, SINTERED, WATER,5.2mmX 15.88mmX200mm	Flat	58W @ 200mm	7.874in (200mm)	-	COPPER
126493	FLATTENED,COPPER HEATPIPE, SINTERED, WATER,5.2mmX 15.88mmX250mm	Flat	46W @ 250mm	9.843in (250mm)	-	COPPER
126494	FLATTENED,COPPER HEATPIPE, SINTERED, WATER,5.2mmX 15.88mmX300mm	Flat	38W @ 300mm	11.811in (300mm)	-	COPPER
126495	FLATTENED,COPPER HEATPIPE, SINTERED, WATER,5.2mmX 15.88mmX350mm	Flat	33W @ 350mm	13.78in (350mm)	-	COPPER
126496	FLATTENED,COPPER HEATPIPE, SINTERED, WATER,5.2mmX 15.88mmX400mm	Flat	29W @ 400mm	15.748in (400mm)	-	COPPER
126497	FLATTENED,COPPER HEATPIPE, SINTERED, WATER,5.2mmX 15.88mmX450mm	Flat	25W @ 450mm	17.717in (450mm)	-	COPPER
126498	FLATTENED,COPPER HEATPIPE, SINTERED, WATER,5.2mmX 15.88mmX500mm	Flat	22W @ 500mm	19.685in (500mm)	-	COPPER
126499	FLATTENED,COPPER HEATPIPE, SINTERED, WATER,5.2mmX 15.88mmX550mm	Flat	21W @ 550mm	21.654in (550mm)	-	COPPER
126500	FLATTENED,COPPER HEATPIPE, SINTERED, WATER,5.2mmX 15.88mmX600mm	Flat	19W @ 600mm	23.622in (600mm)	-	COPPER
126501	FLATTENED,COPPER HEATPIPE, SINTERED, WATER,5.5mmX 6.29mmX70mm	Flat	161W @ 70mm	2.756in (70mm)	-	COPPER
126502	FLATTENED,COPPER HEATPIPE, SINTERED, WATER,5.5mmX 6.29mmX100mm	Flat	113W @ 100mm	3.937in (100mm)	-	COPPER
126503	FLATTENED,COPPER HEATPIPE, SINTERED, WATER,5.5mmX 6.29mmX150mm	Flat	75W @ 150mm	5.906in (150mm)	-	COPPER
126504	FLATTENED,COPPER HEATPIPE, SINTERED, WATER,5.5mmX 6.29mmX200mm	Flat	53W @ 200mm	7.874in (200mm)	-	COPPER
126505	FLATTENED,COPPER HEATPIPE, SINTERED, WATER,5.5mmX 6.29mmX250mm	Flat	44W @ 250mm	9.843in (250mm)	-	COPPER
126506	FLATTENED,COPPER HEATPIPE, SINTERED, WATER,5.5mmX 6.29mmX300mm	Flat	37W @ 300mm	11.811in (300mm)	-	COPPER
126507	FLATTENED,COPPER HEATPIPE, SINTERED, WATER,5.5mmX 6.29mmX350mm	Flat	32W @ 350mm	13.78in (350mm)	-	COPPER
126508	FLATTENED,COPPER HEATPIPE, SINTERED, WATER,5.5mmX 6.29mmX400mm	Flat	27W @ 400mm	15.748in (400mm)	-	COPPER
126509	FLATTENED,COPPER HEATPIPE, SINTERED, WATER,5.5mmX 9.43mmX70mm	Flat	175W @ 70mm	2.756in (70mm)	-	COPPER
126510	FLATTENED,COPPER HEATPIPE, SINTERED, WATER,5.5mmX 9.43mmX100mm	Flat	122W @ 100mm	3.937in (100mm)	-	COPPER
126511	FLATTENED,COPPER HEATPIPE, SINTERED, WATER,5.5mmX 9.43mmX150mm	Flat	81W @ 150mm	5.906in (150mm)	-	COPPER
126512	FLATTENED,COPPER HEATPIPE, SINTERED, WATER,5.5mmX 9.43mmX200mm	Flat	61W @ 200mm	7.874in (200mm)	-	COPPER
126513	FLATTENED,COPPER HEATPIPE, SINTERED, WATER,5.5mmX 9.43mmX250mm	Flat	48W @ 250mm	9.843in (250mm)	-	COPPER
126514	FLATTENED,COPPER HEATPIPE, SINTERED, WATER,5.5mmX 9.43mmX300mm	Flat	40W @ 300mm	11.811in (300mm)	-	COPPER

Part #	Description	Shape	Power - Cooling	Length	Diameter	Material
126515	FLATTENED,COPPER HEATPIPE, SINTERED, WATER,5.5mmX 9.43mmX350mm	Flat	34W @ 350mm	13.78in (350mm)	-	COPPER
126516	FLATTENED,COPPER HEATPIPE, SINTERED, WATER,5.5mmX 9.43mmX400mm	Flat	30W @ 400mm	15.748in (400mm)	-	COPPER
126517	FLATTENED,COPPER HEATPIPE, SINTERED, WATER,5.5mmX 9.43mmX450mm	Flat	27W @ 450mm	17.717in (450mm)	-	COPPER
126518	FLATTENED,COPPER HEATPIPE, SINTERED, WATER,5.5mmX 9.43mmX500mm	Flat	24W @ 500mm	19.685in (500mm)	-	COPPER
126519	FLATTENED,COPPER HEATPIPE, SINTERED, WATER,5.5mmX 12.57mmX70mm	Flat	146W @ 70mm	2.756in (70mm)	-	COPPER
126520	FLATTENED,COPPER HEATPIPE, SINTERED, WATER,5.5mmX 12.57mmX100mm	Flat	125W @ 100mm	3.937in (100mm)	-	COPPER
126521	FLATTENED,COPPER HEATPIPE, SINTERED, WATER,5.5mmX 12.57mmX150mm	Flat	83W @ 150mm	5.906in (150mm)	-	COPPER
126522	FLATTENED,COPPER HEATPIPE, SINTERED, WATER,5.5mmX 12.57mmX200mm	Flat	62W @ 200mm	7.874in (200mm)	-	COPPER
126523	FLATTENED,COPPER HEATPIPE, SINTERED, WATER,5.5mmX 12.57mmX250mm	Flat	50W @ 250mm	9.843in (250mm)	-	COPPER
126524	FLATTENED,COPPER HEATPIPE, SINTERED, WATER,5.5mmX 12.57mmX300mm	Flat	41W @ 300mm	11.811in (300mm)	-	COPPER
126525	FLATTENED,COPPER HEATPIPE, SINTERED, WATER,5.5mmX 12.57mmX350mm	Flat	35W @ 350mm	13.78in (350mm)	-	COPPER
126526	FLATTENED,COPPER HEATPIPE, SINTERED, WATER,5.5mmX 12.57mmX400mm	Flat	31W @ 400mm	15.748in (400mm)	-	COPPER
126527	FLATTENED,COPPER HEATPIPE, SINTERED, WATER,5.5mmX 12.57mmX450mm	Flat	27W @ 450mm	17.717in (450mm)	-	COPPER
126528	FLATTENED,COPPER HEATPIPE, SINTERED, WATER,5.5mmX 12.57mmX500mm	Flat	24W @ 500mm	19.685in (500mm)	-	COPPER
126529	FLATTENED,COPPER HEATPIPE, SINTERED, WATER,5.5mmX 12.57mmX550mm	Flat	22W @ 550mm	21.654in (550mm)	-	COPPER
126530	FLATTENED,COPPER HEATPIPE, SINTERED, WATER,5.5mmX 12.57mmX600mm	Flat	20W @ 600mm	23.622in (600mm)	-	COPPER
126531	FLATTENED,COPPER HEATPIPE, SINTERED, WATER,5.5mmX 15.71mmX70mm	Flat	143W @ 70mm	2.756in (70mm)	-	COPPER
126532	FLATTENED,COPPER HEATPIPE, SINTERED, WATER,5.5mmX 15.71mmX100mm	Flat	123W @ 100mm	3.937in (100mm)	-	COPPER
126533	FLATTENED,COPPER HEATPIPE, SINTERED, WATER,5.5mmX 15.71mmX150mm	Flat	82W @ 150mm	5.906in (150mm)	-	COPPER
126534	FLATTENED,COPPER HEATPIPE, SINTERED, WATER,5.5mmX 15.71mmX200mm	Flat	61W @ 200mm	7.874in (200mm)	-	COPPER
126535	FLATTENED,COPPER HEATPIPE, SINTERED, WATER,5.5mmX 15.71mmX250mm	Flat	48W @ 250mm	9.843in (250mm)	-	COPPER
126536	FLATTENED,COPPER HEATPIPE, SINTERED, WATER,5.5mmX 15.71mmX300mm	Flat	40W @ 300mm	11.811in (300mm)	-	COPPER
126537	FLATTENED,COPPER HEATPIPE, SINTERED, WATER,5.5mmX 15.71mmX350mm	Flat	34W @ 350mm	13.78in (350mm)	-	COPPER
126538	FLATTENED,COPPER HEATPIPE, SINTERED, WATER,5.5mmX 15.71mmX400mm	Flat	30W @ 400mm	15.748in (400mm)	-	COPPER
126539	FLATTENED,COPPER HEATPIPE, SINTERED, WATER,5.5mmX 15.71mmX450mm	Flat	26W @ 450mm	17.717in (450mm)	-	COPPER

Part #	Description	Shape	Power - Cooling	Length	Diameter	Material
126540	FLATTENED,COPPER HEATPIPE, SINTERED, WATER,5.5mmX 15.71mmX500mm	Flat	24W @ 500mm	19.685in (500mm)	-	COPPER
126541	FLATTENED,COPPER HEATPIPE, SINTERED, WATER,5.5mmX 15.71mmX550mm	Flat	22W @ 550mm	21.654in (550mm)	-	COPPER
126542	FLATTENED,COPPER HEATPIPE, SINTERED, WATER,5.5mmX 15.71mmX600mm	Flat	20W @ 600mm	23.622in (600mm)	-	COPPER
126543	FLATTENED,COPPER HEATPIPE, SINTERED, WATER,5.7mmX 6.17mmX70mm	Flat	167W @ 70mm	2.756in (70mm)	-	COPPER
126544	FLATTENED,COPPER HEATPIPE, SINTERED, WATER,5.7mmX 6.17mmX100mm	Flat	117W @ 100mm	3.937in (100mm)	-	COPPER
126545	FLATTENED,COPPER HEATPIPE, SINTERED, WATER,5.7mmX 6.17mmX150mm	Flat	77W @ 150mm	5.906in (150mm)	-	COPPER
126546	FLATTENED,COPPER HEATPIPE, SINTERED, WATER,5.7mmX 6.17mmX200mm	Flat	55W @ 200mm	7.874in (200mm)	-	COPPER
126547	FLATTENED,COPPER HEATPIPE, SINTERED, WATER,5.7mmX 6.17mmX250mm	Flat	46W @ 250mm	9.843in (250mm)	-	COPPER
126548	FLATTENED,COPPER HEATPIPE, SINTERED, WATER,5.7mmX 6.17mmX300mm	Flat	39W @ 300mm	11.811in (300mm)	-	COPPER
126549	FLATTENED,COPPER HEATPIPE, SINTERED, WATER,5.7mmX 6.17mmX350mm	Flat	33W @ 350mm	13.78in (350mm)	-	COPPER
126550	FLATTENED,COPPER HEATPIPE, SINTERED, WATER,5.7mmX 6.17mmX400mm	Flat	28W @ 400mm	15.748in (400mm)	-	COPPER
126551	FLATTENED,COPPER HEATPIPE, SINTERED, WATER,5.7mmX 9.31mmX70mm	Flat	182W @ 70mm	2.756in (70mm)	-	COPPER
126552	FLATTENED,COPPER HEATPIPE, SINTERED, WATER,5.7mmX 9.31mmX100mm	Flat	127W @ 100mm	3.937in (100mm)	-	COPPER
126553	FLATTENED,COPPER HEATPIPE, SINTERED, WATER,5.7mmX 9.31mmX150mm	Flat	84W @ 150mm	5.906in (150mm)	-	COPPER
126554	FLATTENED,COPPER HEATPIPE, SINTERED, WATER,5.7mmX 9.31mmX200mm	Flat	63W @ 200mm	7.874in (200mm)	-	COPPER
126555	FLATTENED,COPPER HEATPIPE, SINTERED, WATER,5.7mmX 9.31mmX250mm	Flat	50W @ 250mm	9.843in (250mm)	-	COPPER
126556	FLATTENED,COPPER HEATPIPE, SINTERED, WATER,5.7mmX 9.31mmX300mm	Flat	41W @ 300mm	11.811in (300mm)	-	COPPER
126557	FLATTENED,COPPER HEATPIPE, SINTERED, WATER,5.7mmX 9.31mmX350mm	Flat	36W @ 350mm	13.78in (350mm)	-	COPPER
126558	FLATTENED,COPPER HEATPIPE, SINTERED, WATER,5.7mmX 9.31mmX400mm	Flat	31W @ 400mm	15.748in (400mm)	-	COPPER
126559	FLATTENED,COPPER HEATPIPE, SINTERED, WATER,5.7mmX 9.31mmX450mm	Flat	28W @ 450mm	17.717in (450mm)	-	COPPER
126560	FLATTENED,COPPER HEATPIPE, SINTERED, WATER,5.7mmX 9.31mmX500mm	Flat	25W @ 500mm	19.685in (500mm)	-	COPPER
126561	FLATTENED,COPPER HEATPIPE, SINTERED, WATER,5.7mmX 12.45mmX70mm	Flat	151W @ 70mm	2.756in (70mm)	-	COPPER
126562	FLATTENED,COPPER HEATPIPE, SINTERED, WATER,5.7mmX 12.45mmX100mm	Flat	130W @ 100mm	3.937in (100mm)	-	COPPER
126563	FLATTENED,COPPER HEATPIPE, SINTERED, WATER,5.7mmX 12.45mmX150mm	Flat	87W @ 150mm	5.906in (150mm)	-	COPPER
126564	FLATTENED,COPPER HEATPIPE, SINTERED, WATER,5.7mmX 12.45mmX200mm	Flat	65W @ 200mm	7.874in (200mm)	-	COPPER

Part #	Description	Shape	Power - Cooling	Length	Diameter	Material
126565	FLATTENED,COPPER HEATPIPE, SINTERED, WATER,5.7mmX 12.45mmX250mm	Flat	51W @ 250mm	9.843in (250mm)	-	COPPER
126566	FLATTENED,COPPER HEATPIPE, SINTERED, WATER,5.7mmX 12.45mmX300mm	Flat	43W @ 300mm	11.811in (300mm)	-	COPPER
126567	FLATTENED,COPPER HEATPIPE, SINTERED, WATER,5.7mmX 12.45mmX350mm	Flat	37W @ 350mm	13.78in (350mm)	-	COPPER
126568	FLATTENED,COPPER HEATPIPE, SINTERED, WATER,5.7mmX 12.45mmX400mm	Flat	32W @ 400mm	15.748in (400mm)	-	COPPER
126569	FLATTENED,COPPER HEATPIPE, SINTERED, WATER,5.7mmX 12.45mmX450mm	Flat	28W @ 450mm	17.717in (450mm)	-	COPPER
126570	FLATTENED,COPPER HEATPIPE, SINTERED, WATER,5.7mmX 12.45mmX500mm	Flat	25W @ 500mm	19.685in (500mm)	-	COPPER
126571	FLATTENED,COPPER HEATPIPE, SINTERED, WATER,5.7mmX 12.45mmX550mm	Flat	23W @ 550mm	21.654in (550mm)	-	COPPER
126572	FLATTENED,COPPER HEATPIPE, SINTERED, WATER,5.7mmX 12.45mmX600mm	Flat	21W @ 600mm	23.622in (600mm)	-	COPPER
126573	FLATTENED,COPPER HEATPIPE, SINTERED, WATER,5.7mmX 15.6mmX70mm	Flat	149W @ 70mm	2.756in (70mm)	-	COPPER
126574	FLATTENED,COPPER HEATPIPE, SINTERED, WATER,5.7mmX 15.6mmX100mm	Flat	128W @ 100mm	3.937in (100mm)	-	COPPER
126575	FLATTENED,COPPER HEATPIPE, SINTERED, WATER,5.7mmX 15.6mmX150mm	Flat	85W @ 150mm	5.906in (150mm)	-	COPPER
126576	FLATTENED,COPPER HEATPIPE, SINTERED, WATER,5.7mmX 15.6mmX200mm	Flat	63W @ 200mm	7.874in (200mm)	-	COPPER
126577	FLATTENED,COPPER HEATPIPE, SINTERED, WATER,5.7mmX 15.6mmX250mm	Flat	50W @ 250mm	9.843in (250mm)	-	COPPER
126578	FLATTENED,COPPER HEATPIPE, SINTERED, WATER,5.7mmX 15.6mmX300mm	Flat	42W @ 300mm	11.811in (300mm)	-	COPPER
126579	FLATTENED,COPPER HEATPIPE, SINTERED, WATER,5.7mmX 15.6mmX350mm	Flat	36W @ 350mm	13.78in (350mm)	-	COPPER
126580	FLATTENED,COPPER HEATPIPE, SINTERED, WATER,5.7mmX 15.6mmX400mm	Flat	31W @ 400mm	15.748in (400mm)	-	COPPER
126581	FLATTENED,COPPER HEATPIPE, SINTERED, WATER,5.7mmX 15.6mmX450mm	Flat	27W @ 450mm	17.717in (450mm)	-	COPPER
126582	FLATTENED,COPPER HEATPIPE, SINTERED, WATER,5.7mmX 15.6mmX500mm	Flat	24W @ 500mm	19.685in (500mm)	-	COPPER
126583	FLATTENED,COPPER HEATPIPE, SINTERED, WATER,5.7mmX 15.6mmX550mm	Flat	23W @ 550mm	21.654in (550mm)	-	COPPER
126584	FLATTENED,COPPER HEATPIPE, SINTERED, WATER,5.7mmX 15.6mmX600mm	Flat	20W @ 600mm	23.622in (600mm)	-	COPPER
126585	FLATTENED,COPPER HEATPIPE, SINTERED, WATER,6mmX 9.14mmX70mm	Flat	191W @ 70mm	2.756in (70mm)	-	COPPER
126586	FLATTENED,COPPER HEATPIPE, SINTERED, WATER,6mmX 9.14mmX100mm	Flat	133W @ 100mm	3.937in (100mm)	-	COPPER
126587	FLATTENED,COPPER HEATPIPE, SINTERED, WATER,6mmX 9.14mmX150mm	Flat	89W @ 150mm	5.906in (150mm)	-	COPPER
126588	FLATTENED,COPPER HEATPIPE, SINTERED, WATER,6mmX 9.14mmX200mm	Flat	66W @ 200mm	7.874in (200mm)	-	COPPER
126589	FLATTENED,COPPER HEATPIPE, SINTERED, WATER,6mmX 9.14mmX250mm	Flat	53W @ 250mm	9.843in (250mm)	-	COPPER

Part #	Description	Shape	Power - Cooling	Length	Diameter	Material
126590	FLATTENED,COPPER HEATPIPE, SINTERED, WATER,6mmX 9.14mmX300mm	Flat	44W @ 300mm	11.811in (300mm)	-	COPPER
126591	FLATTENED,COPPER HEATPIPE, SINTERED, WATER,6mmX 9.14mmX350mm	Flat	37W @ 350mm	13.78in (350mm)	-	COPPER
126592	FLATTENED,COPPER HEATPIPE, SINTERED, WATER,6mmX 9.14mmX400mm	Flat	33W @ 400mm	15.748in (400mm)	-	COPPER
126593	FLATTENED,COPPER HEATPIPE, SINTERED, WATER,6mmX 9.14mmX450mm	Flat	29W @ 450mm	17.717in (450mm)	-	COPPER
126594	FLATTENED,COPPER HEATPIPE, SINTERED, WATER,6mmX 9.14mmX500mm	Flat	26W @ 500mm	19.685in (500mm)	-	COPPER
126595	FLATTENED,COPPER HEATPIPE, SINTERED, WATER,6mmX 12.28mmX70mm	Flat	159W @ 70mm	2.756in (70mm)	-	COPPER
126596	FLATTENED,COPPER HEATPIPE, SINTERED, WATER,6mmX 12.28mmX100mm	Flat	137W @ 100mm	3.937in (100mm)	-	COPPER
126597	FLATTENED,COPPER HEATPIPE, SINTERED, WATER,6mmX 12.28mmX150mm	Flat	91W @ 150mm	5.906in (150mm)	-	COPPER
126598	FLATTENED,COPPER HEATPIPE, SINTERED, WATER,6mmX 12.28mmX200mm	Flat	68W @ 200mm	7.874in (200mm)	-	COPPER
126599	FLATTENED,COPPER HEATPIPE, SINTERED, WATER,6mmX 12.28mmX250mm	Flat	54W @ 250mm	9.843in (250mm)	-	COPPER
126600	FLATTENED,COPPER HEATPIPE, SINTERED, WATER,6mmX 12.28mmX300mm	Flat	45W @ 300mm	11.811in (300mm)	-	COPPER
126601	FLATTENED,COPPER HEATPIPE, SINTERED, WATER,6mmX 12.28mmX350mm	Flat	39W @ 350mm	13.78in (350mm)	-	COPPER
126602	FLATTENED,COPPER HEATPIPE, SINTERED, WATER,6mmX 12.28mmX400mm	Flat	34W @ 400mm	15.748in (400mm)	-	COPPER
126603	FLATTENED,COPPER HEATPIPE, SINTERED, WATER,6mmX 12.28mmX450mm	Flat	30W @ 450mm	17.717in (450mm)	-	COPPER
126604	FLATTENED,COPPER HEATPIPE, SINTERED, WATER,6mmX 12.28mmX500mm	Flat	27W @ 500mm	19.685in (500mm)	-	COPPER
126605	FLATTENED,COPPER HEATPIPE, SINTERED, WATER,6mmX 12.28mmX550mm	Flat	24W @ 550mm	21.654in (550mm)	-	COPPER
126606	FLATTENED,COPPER HEATPIPE, SINTERED, WATER,6mmX 12.28mmX600mm	Flat	22W @ 600mm	23.622in (600mm)	-	COPPER
126607	FLATTENED,COPPER HEATPIPE, SINTERED, WATER,6mmX 15.42mmX70mm	Flat	156W @ 70mm	2.756in (70mm)	-	COPPER
126608	FLATTENED,COPPER HEATPIPE, SINTERED, WATER,6mmX 15.42mmX100mm	Flat	134W @ 100mm	3.937in (100mm)	-	COPPER
126609	FLATTENED,COPPER HEATPIPE, SINTERED, WATER,6mmX 15.42mmX150mm	Flat	89W @ 150mm	5.906in (150mm)	-	COPPER
126610	FLATTENED,COPPER HEATPIPE, SINTERED, WATER,6mmX 15.42mmX200mm	Flat	67W @ 200mm	7.874in (200mm)	-	COPPER
126611	FLATTENED,COPPER HEATPIPE, SINTERED, WATER,6mmX 15.42mmX250mm	Flat	53W @ 250mm	9.843in (250mm)	-	COPPER
126612	FLATTENED,COPPER HEATPIPE, SINTERED, WATER,6mmX 15.42mmX300mm	Flat	48W @ 300mm	11.811in (300mm)	-	COPPER
126613	FLATTENED,COPPER HEATPIPE, SINTERED, WATER,6mmX 15.42mmX350mm	Flat	38W @ 350mm	13.78in (350mm)	-	COPPER
126614	FLATTENED,COPPER HEATPIPE, SINTERED, WATER,6mmX 15.42mmX400mm	Flat	33W @ 400mm	15.748in (400mm)	-	COPPER

Part #	Description	Shape	Power - Cooling	Length	Diameter	Material
126615	FLATTENED,COPPER HEATPIPE, SINTERED, WATER,6mmX 15.42mmX450mm	Flat	29W @ 450mm	17.717in (450mm)	-	COPPER
126616	FLATTENED,COPPER HEATPIPE, SINTERED, WATER,6mmX 15.42mmX500mm	Flat	26W @ 500mm	19.685in (500mm)	-	COPPER
126617	FLATTENED,COPPER HEATPIPE, SINTERED, WATER,6mmX 15.42mmX550mm	Flat	24W @ 550mm	21.654in (550mm)	-	COPPER
126618	FLATTENED,COPPER HEATPIPE, SINTERED, WATER,6mmX 15.42mmX600mm	Flat	22W @ 600mm	23.622in (600mm)	-	COPPER
126619	FLATTENED,COPPER HEATPIPE, SINTERED, WATER,6.5mmX 8.86mmX70mm	Flat	207W @ 70mm	2.756in (70mm)	-	COPPER
126620	FLATTENED,COPPER HEATPIPE, SINTERED, WATER,6.5mmX 8.86mmX100mm	Flat	145W @ 100mm	3.937in (100mm)	-	COPPER
126621	FLATTENED,COPPER HEATPIPE, SINTERED, WATER,6.5mmX 8.86mmX150mm	Flat	96W @ 150mm	5.906in (150mm)	-	COPPER
126622	FLATTENED,COPPER HEATPIPE, SINTERED, WATER,6.5mmX 8.86mmX200mm	Flat	72W @ 200mm	7.874in (200mm)	-	COPPER
126623	FLATTENED,COPPER HEATPIPE, SINTERED, WATER,6.5mmX 8.86mmX250mm	Flat	57W @ 250mm	9.843in (250mm)	-	COPPER
126624	FLATTENED,COPPER HEATPIPE, SINTERED, WATER,6.5mmX 8.86mmX300mm	Flat	47W @ 300mm	11.811in (300mm)	-	COPPER
126625	FLATTENED,COPPER HEATPIPE, SINTERED, WATER,6.5mmX 8.86mmX350mm	Flat	41W @ 350mm	13.78in (350mm)	-	COPPER
126626	FLATTENED,COPPER HEATPIPE, SINTERED, WATER,6.5mmX 8.86mmX400mm	Flat	35W @ 400mm	15.748in (400mm)	-	COPPER
126627	FLATTENED,COPPER HEATPIPE, SINTERED, WATER,6.5mmX 8.86mmX450mm	Flat	32W @ 450mm	17.717in (450mm)	-	COPPER
126628	FLATTENED,COPPER HEATPIPE, SINTERED, WATER,6.5mmX 8.86mmX500mm	Flat	29W @ 500mm	19.685in (500mm)	-	COPPER
126629	FLATTENED,COPPER HEATPIPE, SINTERED, WATER,6.5mmX 12mmX70mm	Flat	172W @ 70mm	2.756in (70mm)	-	COPPER
126630	FLATTENED,COPPER HEATPIPE, SINTERED, WATER,6.5mmX 12mmX100mm	Flat	148W @ 100mm	3.937in (100mm)	-	COPPER
126631	FLATTENED,COPPER HEATPIPE, SINTERED, WATER,6.5mmX 12mmX150mm	Flat	99W @ 150mm	5.906in (150mm)	-	COPPER
126632	FLATTENED,COPPER HEATPIPE, SINTERED, WATER,6.5mmX 12mmX200mm	Flat	74W @ 200mm	7.874in (200mm)	-	COPPER
126633	FLATTENED,COPPER HEATPIPE, SINTERED, WATER,6.5mmX 12mmX250mm	Flat	59W @ 250mm	9.843in (250mm)	-	COPPER
126634	FLATTENED,COPPER HEATPIPE, SINTERED, WATER,6.5mmX 12mmX300mm	Flat	49W @ 300mm	11.811in (300mm)	-	COPPER
126635	FLATTENED,COPPER HEATPIPE, SINTERED, WATER,6.5mmX 12mmX350mm	Flat	42W @ 350mm	13.78in (350mm)	-	COPPER
126636	FLATTENED,COPPER HEATPIPE, SINTERED, WATER,6.5mmX 12mmX400mm	Flat	37W @ 400mm	15.748in (400mm)	-	COPPER
126637	FLATTENED,COPPER HEATPIPE, SINTERED, WATER,6.5mmX 12mmX450mm	Flat	32W @ 450mm	17.717in (450mm)	-	COPPER
126638	FLATTENED,COPPER HEATPIPE, SINTERED, WATER,6.5mmX 12mmX500mm	Flat	29W @ 500mm	19.685in (500mm)	-	COPPER
126639	FLATTENED,COPPER HEATPIPE, SINTERED, WATER,6.5mmX 12mmX550mm	Flat	26W @ 550mm	21.654in (550mm)	-	COPPER

Part #	Description	Shape	Power - Cooling	Length	Diameter	Material
126640	FLATTENED,COPPER HEATPIPE, SINTERED, WATER,6.5mmX 12mmX600mm	Flat	24W @ 600mm	23.622in (600mm)	-	COPPER
126641	FLATTENED,COPPER HEATPIPE, SINTERED, WATER,6.5mmX 15.14mmX70mm	Flat	169W @ 70mm	2.756in (70mm)	-	COPPER
126642	FLATTENED,COPPER HEATPIPE, SINTERED, WATER,6.5mmX 15.14mmX100mm	Flat	146W @ 100mm	3.937in (100mm)	-	COPPER
126643	FLATTENED,COPPER HEATPIPE, SINTERED, WATER,6.5mmX 15.14mmX150mm	Flat	97W @ 150mm	5.906in (150mm)	-	COPPER
126644	FLATTENED,COPPER HEATPIPE, SINTERED, WATER,6.5mmX 15.14mmX200mm	Flat	72W @ 200mm	7.874in (200mm)	-	COPPER
126645	FLATTENED,COPPER HEATPIPE, SINTERED, WATER,6.5mmX 15.14mmX250mm	Flat	57W @ 250mm	9.843in (250mm)	-	COPPER
126646	FLATTENED,COPPER HEATPIPE, SINTERED, WATER,6.5mmX 15.14mmX300mm	Flat	48W @ 300mm	11.811in (300mm)	-	COPPER
126647	FLATTENED,COPPER HEATPIPE, SINTERED, WATER,6.5mmX 15.14mmX350mm	Flat	41W @ 350mm	13.78in (350mm)	-	COPPER
126648	FLATTENED,COPPER HEATPIPE, SINTERED, WATER,6.5mmX 15.14mmX400mm	Flat	36W @ 400mm	15.748in (400mm)	-	COPPER
126649	FLATTENED,COPPER HEATPIPE, SINTERED, WATER,6.5mmX 15.14mmX450mm	Flat	31W @ 450mm	17.717in (450mm)	-	COPPER
126650	FLATTENED,COPPER HEATPIPE, SINTERED, WATER,6.5mmX 15.14mmX500mm	Flat	28W @ 500mm	19.685in (500mm)	-	COPPER
126651	FLATTENED,COPPER HEATPIPE, SINTERED, WATER,6.5mmX 15.14mmX550mm	Flat	26W @ 550mm	21.654in (550mm)	-	COPPER
126652	FLATTENED,COPPER HEATPIPE, SINTERED, WATER,6.5mmX 15.14mmX600mm	Flat	23W @ 600mm	23.622in (600mm)	-	COPPER
126653	FLATTENED,COPPER HEATPIPE, SINTERED, WATER,7mmX 8.57mmX70mm	Flat	223W @ 70mm	2.756in (70mm)	-	COPPER
126654	FLATTENED,COPPER HEATPIPE, SINTERED, WATER,7mmX 8.57mmX100mm	Flat	156W @ 100mm	3.937in (100mm)	-	COPPER
126655	FLATTENED,COPPER HEATPIPE, SINTERED, WATER,7mmX 8.57mmX150mm	Flat	103W @ 150mm	5.906in (150mm)	-	COPPER
126656	FLATTENED,COPPER HEATPIPE, SINTERED, WATER,7mmX 8.57mmX200mm	Flat	78W @ 200mm	7.874in (200mm)	-	COPPER
126657	FLATTENED,COPPER HEATPIPE, SINTERED, WATER,7mmX 8.57mmX250mm	Flat	61W @ 250mm	9.843in (250mm)	-	COPPER
126658	FLATTENED,COPPER HEATPIPE, SINTERED, WATER,7mmX 8.57mmX300mm	Flat	51W @ 300mm	11.811in (300mm)	-	COPPER
126659	FLATTENED,COPPER HEATPIPE, SINTERED, WATER,7mmX 8.57mmX350mm	Flat	44W @ 350mm	13.78in (350mm)	-	COPPER
126660	FLATTENED,COPPER HEATPIPE, SINTERED, WATER,7mmX 8.57mmX400mm	Flat	38W @ 400mm	15.748in (400mm)	-	COPPER
126661	FLATTENED,COPPER HEATPIPE, SINTERED, WATER,7mmX 8.57mmX450mm	Flat	34W @ 450mm	17.717in (450mm)	-	COPPER
126662	FLATTENED,COPPER HEATPIPE, SINTERED, WATER,7mmX 8.57mmX500mm	Flat	31W @ 500mm	19.685in (500mm)	-	COPPER
126663	FLATTENED,COPPER HEATPIPE, SINTERED, WATER,7mmX 11.71mmX70mm	Flat	186W @ 70mm	2.756in (70mm)	-	COPPER
126664	FLATTENED,COPPER HEATPIPE, SINTERED, WATER,7mmX 11.71mmX100mm	Flat	160W @ 100mm	3.937in (100mm)	-	COPPER

Part #	Description	Shape	Power - Cooling	Length	Diameter	Material
126665	FLATTENED,COPPER HEATPIPE, SINTERED, WATER,7mmX 11.71mmX150mm	Flat	106W @ 150mm	5.906in (150mm)	-	COPPER
126666	FLATTENED,COPPER HEATPIPE, SINTERED, WATER,7mmX 11.71mmX200mm	Flat	79W @ 200mm	7.874in (200mm)	-	COPPER
126667	FLATTENED,COPPER HEATPIPE, SINTERED, WATER,7mmX 11.71mmX250mm	Flat	63W @ 250mm	9.843in (250mm)	-	COPPER
126668	FLATTENED,COPPER HEATPIPE, SINTERED, WATER,7mmX 11.71mmX300mm	Flat	53W @ 300mm	11.811in (300mm)	-	COPPER
126669	FLATTENED,COPPER HEATPIPE, SINTERED, WATER,7mmX 11.71mmX350mm	Flat	45W @ 350mm	13.78in (350mm)	-	COPPER
126670	FLATTENED,COPPER HEATPIPE, SINTERED, WATER,7mmX 11.71mmX400mm	Flat	39W @ 400mm	15.748in (400mm)	-	COPPER
126671	FLATTENED,COPPER HEATPIPE, SINTERED, WATER,7mmX 11.71mmX450mm	Flat	35W @ 450mm	17.717in (450mm)	-	COPPER
126672	FLATTENED,COPPER HEATPIPE, SINTERED, WATER,7mmX 11.71mmX500mm	Flat	31W @ 500mm	19.685in (500mm)	-	COPPER
126673	FLATTENED,COPPER HEATPIPE, SINTERED, WATER,7mmX 11.71mmX550mm	Flat	28W @ 550mm	21.654in (550mm)	-	COPPER
126674	FLATTENED,COPPER HEATPIPE, SINTERED, WATER,7mmX 11.71mmX600mm	Flat	26W @ 600mm	23.622in (600mm)	-	COPPER
126675	FLATTENED,COPPER HEATPIPE, SINTERED, WATER,7mmX 14.85mmX70mm	Flat	183W @ 70mm	2.756in (70mm)	-	COPPER
126676	FLATTENED,COPPER HEATPIPE, SINTERED, WATER,7mmX 14.85mmX100mm	Flat	157W @ 100mm	3.937in (100mm)	-	COPPER
126677	FLATTENED,COPPER HEATPIPE, SINTERED, WATER,7mmX 14.85mmX150mm	Flat	104W @ 150mm	5.906in (150mm)	-	COPPER
126678	FLATTENED,COPPER HEATPIPE, SINTERED, WATER,7mmX 14.85mmX200mm	Flat	78W @ 200mm	7.874in (200mm)	-	COPPER
126679	FLATTENED,COPPER HEATPIPE, SINTERED, WATER,7mmX 14.85mmX250mm	Flat	62W @ 250mm	9.843in (250mm)	-	COPPER
126680	FLATTENED,COPPER HEATPIPE, SINTERED, WATER,7mmX 14.85mmX300mm	Flat	56W @ 300mm	11.811in (300mm)	-	COPPER
126681	FLATTENED,COPPER HEATPIPE, SINTERED, WATER,7mmX 14.85mmX350mm	Flat	44W @ 350mm	13.78in (350mm)	-	COPPER
126682	FLATTENED,COPPER HEATPIPE, SINTERED, WATER,7mmX 14.85mmX400mm	Flat	39W @ 400mm	15.748in (400mm)	-	COPPER
126683	FLATTENED,COPPER HEATPIPE, SINTERED, WATER,7mmX 14.85mmX450mm	Flat	34W @ 450mm	17.717in (450mm)	-	COPPER
126684	FLATTENED,COPPER HEATPIPE, SINTERED, WATER,7mmX 14.85mmX500mm	Flat	30W @ 500mm	19.685in (500mm)	-	COPPER
126685	FLATTENED,COPPER HEATPIPE, SINTERED, WATER,7mmX 14.85mmX550mm	Flat	28W @ 550mm	21.654in (550mm)	-	COPPER
126686	FLATTENED,COPPER HEATPIPE, SINTERED, WATER,7mmX 14.85mmX600mm	Flat	25W @ 600mm	23.622in (600mm)	-	COPPER
126687	FLATTENED,COPPER HEATPIPE, SINTERED, WATER,8mmX 11.14mmX70mm	Flat	212W @ 70mm	2.756in (70mm)	-	COPPER
126688	FLATTENED,COPPER HEATPIPE, SINTERED, WATER,8mmX 11.14mmX100mm	Flat	183W @ 100mm	3.937in (100mm)	-	COPPER
126689	FLATTENED,COPPER HEATPIPE, SINTERED, WATER,8mmX 11.14mmX150mm	Flat	122W @ 150mm	5.906in (150mm)	-	COPPER

Part #	Description	Shape	Power - Cooling	Length	Diameter	Material
126690	FLATTENED,COPPER HEATPIPE, SINTERED, WATER,8mmX 11.14mmX200mm	Flat	91W @ 200mm	7.874in (200mm)	-	COPPER
126691	FLATTENED,COPPER HEATPIPE, SINTERED, WATER,8mmX 11.14mmX250mm	Flat	72W @ 250mm	9.843in (250mm)	-	COPPER
126692	FLATTENED,COPPER HEATPIPE, SINTERED, WATER,8mmX 11.14mmX300mm	Flat	61W @ 300mm	11.811in (300mm)	-	COPPER
126693	FLATTENED,COPPER HEATPIPE, SINTERED, WATER,8mmX 11.14mmX350mm	Flat	52W @ 350mm	13.78in (350mm)	-	COPPER
126694	FLATTENED,COPPER HEATPIPE, SINTERED, WATER,8mmX 11.14mmX400mm	Flat	45W @ 400mm	15.748in (400mm)	-	COPPER
126695	FLATTENED,COPPER HEATPIPE, SINTERED, WATER,8mmX 11.14mmX450mm	Flat	40W @ 450mm	17.717in (450mm)	-	COPPER
126696	FLATTENED,COPPER HEATPIPE, SINTERED, WATER,8mmX 11.14mmX500mm	Flat	36W @ 500mm	19.685in (500mm)	-	COPPER
126697	FLATTENED,COPPER HEATPIPE, SINTERED, WATER,8mmX 11.14mmX550mm	Flat	33W @ 550mm	21.654in (550mm)	-	COPPER
126698	FLATTENED,COPPER HEATPIPE, SINTERED, WATER,8mmX 11.14mmX600mm	Flat	30W @ 600mm	23.622in (600mm)	-	COPPER
126699	FLATTENED,COPPER HEATPIPE, SINTERED, WATER,8mmX 14.28mmX70mm	Flat	209W @ 70mm	2.756in (70mm)	-	COPPER
126700	FLATTENED,COPPER HEATPIPE, SINTERED, WATER,8mmX 14.28mmX100mm	Flat	179W @ 100mm	3.937in (100mm)	-	COPPER
126701	FLATTENED,COPPER HEATPIPE, SINTERED, WATER,8mmX 14.28mmX150mm	Flat	119W @ 150mm	5.906in (150mm)	-	COPPER
126702	FLATTENED,COPPER HEATPIPE, SINTERED, WATER,8mmX 14.28mmX200mm	Flat	89W @ 200mm	7.874in (200mm)	-	COPPER
126703	FLATTENED,COPPER HEATPIPE, SINTERED, WATER,8mmX 14.28mmX250mm	Flat	71W @ 250mm	9.843in (250mm)	-	COPPER
126704	FLATTENED,COPPER HEATPIPE, SINTERED, WATER,8mmX 14.28mmX300mm	Flat	64W @ 300mm	11.811in (300mm)	-	COPPER
126705	FLATTENED,COPPER HEATPIPE, SINTERED, WATER,8mmX 14.28mmX350mm	Flat	50W @ 350mm	13.78in (350mm)	-	COPPER
126706	FLATTENED,COPPER HEATPIPE, SINTERED, WATER,8mmX 14.28mmX400mm	Flat	44W @ 400mm	15.748in (400mm)	-	COPPER
126707	FLATTENED,COPPER HEATPIPE, SINTERED, WATER,8mmX 14.28mmX450mm	Flat	39W @ 450mm	17.717in (450mm)	-	COPPER
126708	FLATTENED,COPPER HEATPIPE, SINTERED, WATER,8mmX 14.28mmX500mm	Flat	34W @ 500mm	19.685in (500mm)	-	COPPER
126709	FLATTENED,COPPER HEATPIPE, SINTERED, WATER,8mmX 14.28mmX550mm	Flat	32W @ 550mm	21.654in (550mm)	-	COPPER
126710	FLATTENED,COPPER HEATPIPE, SINTERED, WATER,8mmX 14.28mmX600mm	Flat	29W @ 600mm	23.622in (600mm)	-	COPPER
126711	FLATTENED,COPPER HEATPIPE, SINTERED, WATER,8.5mmX 10.86mmX70mm	Flat	225W @ 70mm	2.756in (70mm)	-	COPPER
126712	FLATTENED,COPPER HEATPIPE, SINTERED, WATER,8.5mmX 10.86mmX100mm	Flat	194W @ 100mm	3.937in (100mm)	-	COPPER
126713	FLATTENED,COPPER HEATPIPE, SINTERED, WATER,8.5mmX 10.86mmX150mm	Flat	129W @ 150mm	5.906in (150mm)	-	COPPER
126714	FLATTENED,COPPER HEATPIPE, SINTERED, WATER,8.5mmX 10.86mmX200mm	Flat	96W @ 200mm	7.874in (200mm)	-	COPPER

Part #	Description	Shape	Power - Cooling	Length	Diameter	Material
126715	FLATTENED,COPPER HEATPIPE, SINTERED, WATER,8.5mmX 10.86mmX250mm	Flat	77W @ 250mm	9.843in (250mm)	-	COPPER
126716	FLATTENED,COPPER HEATPIPE, SINTERED, WATER,8.5mmX 10.86mmX300mm	Flat	64W @ 300mm	11.811in (300mm)	-	COPPER
126717	FLATTENED,COPPER HEATPIPE, SINTERED, WATER,8.5mmX 10.86mmX350mm	Flat	55W @ 350mm	13.78in (350mm)	-	COPPER
126718	FLATTENED,COPPER HEATPIPE, SINTERED, WATER,8.5mmX 10.86mmX400mm	Flat	48W @ 400mm	15.748in (400mm)	-	COPPER
126719	FLATTENED,COPPER HEATPIPE, SINTERED, WATER,8.5mmX 10.86mmX450mm	Flat	43W @ 450mm	17.717in (450mm)	-	COPPER
126720	FLATTENED,COPPER HEATPIPE, SINTERED, WATER,8.5mmX 10.86mmX500mm	Flat	38W @ 500mm	19.685in (500mm)	-	COPPER
126721	FLATTENED,COPPER HEATPIPE, SINTERED, WATER,8.5mmX 10.86mmX550mm	Flat	35W @ 550mm	21.654in (550mm)	-	COPPER
126722	FLATTENED,COPPER HEATPIPE, SINTERED, WATER,8.5mmX 10.86mmX600mm	Flat	32W @ 600mm	23.622in (600mm)	-	COPPER
126723	FLATTENED,COPPER HEATPIPE, SINTERED, WATER,8.5mmX 14mmX70mm	Flat	222W @ 70mm	2.756in (70mm)	-	COPPER
126724	FLATTENED,COPPER HEATPIPE, SINTERED, WATER,8.5mmX 14mmX100mm	Flat	190W @ 100mm	3.937in (100mm)	-	COPPER
126725	FLATTENED,COPPER HEATPIPE, SINTERED, WATER,8.5mmX 14mmX150mm	Flat	127W @ 150mm	5.906in (150mm)	-	COPPER
126726	FLATTENED,COPPER HEATPIPE, SINTERED, WATER,8.5mmX 14mmX200mm	Flat	95W @ 200mm	7.874in (200mm)	-	COPPER
126727	FLATTENED,COPPER HEATPIPE, SINTERED, WATER,8.5mmX 14mmX250mm	Flat	75W @ 250mm	9.843in (250mm)	-	COPPER
126728	FLATTENED,COPPER HEATPIPE, SINTERED, WATER,8.5mmX 14mmX300mm	Flat	63W @ 300mm	11.811in (300mm)	-	COPPER
126729	FLATTENED,COPPER HEATPIPE, SINTERED, WATER,8.5mmX 14mmX350mm	Flat	54W @ 350mm	13.78in (350mm)	-	COPPER
126730	FLATTENED,COPPER HEATPIPE, SINTERED, WATER,8.5mmX 14mmX400mm	Flat	47W @ 400mm	15.748in (400mm)	-	COPPER
126731	FLATTENED,COPPER HEATPIPE, SINTERED, WATER,8.5mmX 14mmX450mm	Flat	41W @ 450mm	17.717in (450mm)	-	COPPER
126732	FLATTENED,COPPER HEATPIPE, SINTERED, WATER,8.5mmX 14mmX500mm	Flat	37W @ 500mm	19.685in (500mm)	-	COPPER
126733	FLATTENED,COPPER HEATPIPE, SINTERED, WATER,8.5mmX 14mmX550mm	Flat	34W @ 550mm	21.654in (550mm)	-	COPPER
126734	FLATTENED,COPPER HEATPIPE, SINTERED, WATER,8.5mmX 14mmX600mm	Flat	31W @ 600mm	23.622in (600mm)	-	COPPER
126735	FLATTENED,COPPER HEATPIPE, SINTERED, WATER,9mmX 10.57mmX70mm	Flat	239W @ 70mm	2.756in (70mm)	-	COPPER
126736	FLATTENED,COPPER HEATPIPE, SINTERED, WATER,9mmX 10.57mmX100mm	Flat	206W @ 100mm	3.937in (100mm)	-	COPPER
126737	FLATTENED,COPPER HEATPIPE, SINTERED, WATER,9mmX 10.57mmX150mm	Flat	137W @ 150mm	5.906in (150mm)	-	COPPER
126738	FLATTENED,COPPER HEATPIPE, SINTERED, WATER,9mmX 10.57mmX200mm	Flat	102W @ 200mm	7.874in (200mm)	-	COPPER
126739	FLATTENED,COPPER HEATPIPE, SINTERED, WATER,9mmX 10.57mmX250mm	Flat	81W @ 250mm	9.843in (250mm)	-	COPPER

Part #	Description	Shape	Power - Cooling	Length	Diameter	Material
126740	FLATTENED,COPPER HEATPIPE, SINTERED, WATER,9mmX 10.57mmX300mm	Flat	68W @ 300mm	11.811in (300mm)	-	COPPER
126741	FLATTENED,COPPER HEATPIPE, SINTERED, WATER,9mmX 10.57mmX350mm	Flat	58W @ 350mm	13.78in (350mm)	-	COPPER
126742	FLATTENED,COPPER HEATPIPE, SINTERED, WATER,9mmX 10.57mmX400mm	Flat	51W @ 400mm	15.748in (400mm)	-	COPPER
126743	FLATTENED,COPPER HEATPIPE, SINTERED, WATER,9mmX 10.57mmX450mm	Flat	45W @ 450mm	17.717in (450mm)	-	COPPER
126744	FLATTENED,COPPER HEATPIPE, SINTERED, WATER,9mmX 10.57mmX500mm	Flat	40W @ 500mm	19.685in (500mm)	-	COPPER
126745	FLATTENED,COPPER HEATPIPE, SINTERED, WATER,9mmX 10.57mmX550mm	Flat	37W @ 550mm	21.654in (550mm)	-	COPPER
126746	FLATTENED,COPPER HEATPIPE, SINTERED, WATER,9mmX 10.57mmX600mm	Flat	33W @ 600mm	23.622in (600mm)	-	COPPER
126747	FLATTENED,COPPER HEATPIPE, SINTERED, WATER,9mmX 13.71mmX70mm	Flat	235W @ 70mm	2.756in (70mm)	-	COPPER
126748	FLATTENED,COPPER HEATPIPE, SINTERED, WATER,9mmX 13.71mmX100mm	Flat	202W @ 100mm	3.937in (100mm)	-	COPPER
126749	FLATTENED,COPPER HEATPIPE, SINTERED, WATER,9mmX 13.71mmX150mm	Flat	134W @ 150mm	5.906in (150mm)	-	COPPER
126750	FLATTENED,COPPER HEATPIPE, SINTERED, WATER,9mmX 13.71mmX200mm	Flat	100W @ 200mm	7.874in (200mm)	-	COPPER
126751	FLATTENED,COPPER HEATPIPE, SINTERED, WATER,9mmX 13.71mmX250mm	Flat	80W @ 250mm	9.843in (250mm)	-	COPPER
126752	FLATTENED,COPPER HEATPIPE, SINTERED, WATER,9mmX 13.71mmX300mm	Flat	72W @ 300mm	11.811in (300mm)	-	COPPER
126753	FLATTENED,COPPER HEATPIPE, SINTERED, WATER,9mmX 13.71mmX350mm	Flat	57W @ 350mm	13.78in (350mm)	-	COPPER
126754	FLATTENED,COPPER HEATPIPE, SINTERED, WATER,9mmX 13.71mmX400mm	Flat	50W @ 400mm	15.748in (400mm)	-	COPPER
126755	FLATTENED,COPPER HEATPIPE, SINTERED, WATER,9mmX 13.71mmX450mm	Flat	44W @ 450mm	17.717in (450mm)	-	COPPER
126756	FLATTENED,COPPER HEATPIPE, SINTERED, WATER,9mmX 13.71mmX500mm	Flat	39W @ 500mm	19.685in (500mm)	-	COPPER
126757	FLATTENED,COPPER HEATPIPE, SINTERED, WATER,9mmX 13.71mmX550mm	Flat	36W @ 550mm	21.654in (550mm)	-	COPPER
126758	FLATTENED,COPPER HEATPIPE, SINTERED, WATER,9mmX 13.71mmX600mm	Flat	33W @ 600mm	23.622in (600mm)	-	COPPER
126759	FLATTENED,COPPER HEATPIPE, SINTERED, WATER,9.5mmX 10.29mmX70mm	Flat	252W @ 70mm	2.756in (70mm)	-	COPPER
126760	FLATTENED,COPPER HEATPIPE, SINTERED, WATER,9.5mmX 10.29mmX100mm	Flat	217W @ 100mm	3.937in (100mm)	-	COPPER
126761	FLATTENED,COPPER HEATPIPE, SINTERED, WATER,9.5mmX 10.29mmX150mm	Flat	145W @ 150mm	5.906in (150mm)	-	COPPER
126762	FLATTENED,COPPER HEATPIPE, SINTERED, WATER,9.5mmX 10.29mmX200mm	Flat	108W @ 200mm	7.874in (200mm)	-	COPPER
126763	FLATTENED,COPPER HEATPIPE, SINTERED, WATER,9.5mmX 10.29mmX250mm	Flat	86W @ 250mm	9.843in (250mm)	-	COPPER
126764	FLATTENED,COPPER HEATPIPE, SINTERED, WATER,9.5mmX 10.29mmX300mm	Flat	72W @ 300mm	11.811in (300mm)	-	COPPER

Part #	Description	Shape	Power - Cooling	Length	Diameter	Material
126765	FLATTENED,COPPER HEATPIPE, SINTERED, WATER,9.5mmX 10.29mmX350mm	Flat	62W @ 350mm	13.78in (350mm)	-	COPPER
126766	FLATTENED,COPPER HEATPIPE, SINTERED, WATER,9.5mmX 10.29mmX400mm	Flat	54W @ 400mm	15.748in (400mm)	-	COPPER
126767	FLATTENED,COPPER HEATPIPE, SINTERED, WATER,9.5mmX 10.29mmX450mm	Flat	48W @ 450mm	17.717in (450mm)	-	COPPER
126768	FLATTENED,COPPER HEATPIPE, SINTERED, WATER,9.5mmX 10.29mmX500mm	Flat	42W @ 500mm	19.685in (500mm)	-	COPPER
126769	FLATTENED,COPPER HEATPIPE, SINTERED, WATER,9.5mmX 10.29mmX550mm	Flat	39W @ 550mm	21.654in (550mm)	-	COPPER
126770	FLATTENED,COPPER HEATPIPE, SINTERED, WATER,9.5mmX 10.29mmX600mm	Flat	35W @ 600mm	23.622in (600mm)	-	COPPER
126771	FLATTENED,COPPER HEATPIPE, SINTERED, WATER,9.5mmX 13.43mmX70mm	Flat	248W @ 70mm	2.756in (70mm)	-	COPPER
126772	FLATTENED,COPPER HEATPIPE, SINTERED, WATER,9.5mmX 13.43mmX100mm	Flat	213W @ 100mm	3.937in (100mm)	-	COPPER
126773	FLATTENED,COPPER HEATPIPE, SINTERED, WATER,9.5mmX 13.43mmX150mm	Flat	142W @ 150mm	5.906in (150mm)	-	COPPER
126774	FLATTENED,COPPER HEATPIPE, SINTERED, WATER,9.5mmX 13.43mmX200mm	Flat	106W @ 200mm	7.874in (200mm)	-	COPPER
126775	FLATTENED,COPPER HEATPIPE, SINTERED, WATER,9.5mmX 13.43mmX250mm	Flat	84W @ 250mm	9.843in (250mm)	-	COPPER
126776	FLATTENED,COPPER HEATPIPE, SINTERED, WATER,9.5mmX 13.43mmX300mm	Flat	70W @ 300mm	11.811in (300mm)	-	COPPER
126777	FLATTENED,COPPER HEATPIPE, SINTERED, WATER,9.5mmX 13.43mmX350mm	Flat	60W @ 350mm	13.78in (350mm)	-	COPPER
126778	FLATTENED,COPPER HEATPIPE, SINTERED, WATER,9.5mmX 13.43mmX400mm	Flat	53W @ 400mm	15.748in (400mm)	-	COPPER
126779	FLATTENED,COPPER HEATPIPE, SINTERED, WATER,9.5mmX 13.43mmX450mm	Flat	46W @ 450mm	17.717in (450mm)	-	COPPER
126780	FLATTENED,COPPER HEATPIPE, SINTERED, WATER,9.5mmX 13.43mmX500mm	Flat	41W @ 500mm	19.685in (500mm)	-	COPPER
126781	FLATTENED,COPPER HEATPIPE, SINTERED, WATER,9.5mmX 13.43mmX550mm	Flat	38W @ 550mm	21.654in (550mm)	-	COPPER
126782	FLATTENED,COPPER HEATPIPE, SINTERED, WATER,9.5mmX 13.43mmX600mm	Flat	34W @ 600mm	23.622in (600mm)	-	COPPER
126783	FLATTENED,COPPER HEATPIPE, SINTERED, WATER,10mmX 13.14mmX70mm	Flat	261W @ 70mm	2.756in (70mm)	-	COPPER
126784	FLATTENED,COPPER HEATPIPE, SINTERED, WATER,10mmX 13.14mmX100mm	Flat	224W @ 100mm	3.937in (100mm)	-	COPPER
126785	FLATTENED,COPPER HEATPIPE, SINTERED, WATER,10mmX 13.14mmX150mm	Flat	149W @ 150mm	5.906in (150mm)	-	COPPER
126786	FLATTENED,COPPER HEATPIPE, SINTERED, WATER,10mmX 13.14mmX200mm	Flat	111W @ 200mm	7.874in (200mm)	-	COPPER
126787	FLATTENED,COPPER HEATPIPE, SINTERED, WATER,10mmX 13.14mmX250mm	Flat	88W @ 250mm	9.843in (250mm)	-	COPPER
126788	FLATTENED,COPPER HEATPIPE, SINTERED, WATER,10mmX 13.14mmX300mm	Flat	80W @ 300mm	11.811in (300mm)	-	COPPER
126789	FLATTENED,COPPER HEATPIPE, SINTERED, WATER,10mmX 13.14mmX350mm	Flat	63W @ 350mm	13.78in (350mm)	-	COPPER

Part #	Description	Shape	Power - Cooling	Length	Diameter	Material
126790	FLATTENED,COPPER HEATPIPE, SINTERED, WATER,10mmX 13.14mmX400mm	Flat	55W @ 400mm	15.748in (400mm)	-	COPPER
126791	FLATTENED,COPPER HEATPIPE, SINTERED, WATER,10mmX 13.14mmX450mm	Flat	49W @ 450mm	17.717in (450mm)	-	COPPER
126792	FLATTENED,COPPER HEATPIPE, SINTERED, WATER,10mmX 13.14mmX500mm	Flat	43W @ 500mm	19.685in (500mm)	-	COPPER
126793	FLATTENED,COPPER HEATPIPE, SINTERED, WATER,10mmX 13.14mmX550mm	Flat	40W @ 550mm	21.654in (550mm)	-	COPPER
126794	FLATTENED,COPPER HEATPIPE, SINTERED, WATER,10mmX 13.14mmX600mm	Flat	36W @ 600mm	23.622in (600mm)	-	COPPER
126795	FLATTENED,COPPER HEATPIPE, SINTERED, WATER,10.5mmX 12.86mmX70mm	Flat	274W @ 70mm	2.756in (70mm)	-	COPPER
126796	FLATTENED,COPPER HEATPIPE, SINTERED, WATER,10.5mmX 12.86mmX100mm	Flat	235W @ 100mm	3.937in (100mm)	-	COPPER
126797	FLATTENED,COPPER HEATPIPE, SINTERED, WATER,10.5mmX 12.86mmX150mm	Flat	156W @ 150mm	5.906in (150mm)	-	COPPER
126798	FLATTENED,COPPER HEATPIPE, SINTERED, WATER,10.5mmX 12.86mmX200mm	Flat	117W @ 200mm	7.874in (200mm)	-	COPPER
126799	FLATTENED,COPPER HEATPIPE, SINTERED, WATER,10.5mmX 12.86mmX250mm	Flat	93W @ 250mm	9.843in (250mm)	-	COPPER
126800	FLATTENED,COPPER HEATPIPE, SINTERED, WATER,10.5mmX 12.86mmX300mm	Flat	78W @ 300mm	11.811in (300mm)	-	COPPER
126801	FLATTENED,COPPER HEATPIPE, SINTERED, WATER,10.5mmX 12.86mmX350mm	Flat	66W @ 350mm	13.78in (350mm)	-	COPPER
126802	FLATTENED,COPPER HEATPIPE, SINTERED, WATER,10.5mmX 12.86mmX400mm	Flat	58W @ 400mm	15.748in (400mm)	-	COPPER
126803	FLATTENED,COPPER HEATPIPE, SINTERED, WATER,10.5mmX 12.86mmX450mm	Flat	51W @ 450mm	17.717in (450mm)	-	COPPER
126804	FLATTENED,COPPER HEATPIPE, SINTERED, WATER,10.5mmX 12.86mmX500mm	Flat	45W @ 500mm	19.685in (500mm)	-	COPPER
126805	FLATTENED,COPPER HEATPIPE, SINTERED, WATER,10.5mmX 12.86mmX550mm	Flat	42W @ 550mm	21.654in (550mm)	-	COPPER
126806	FLATTENED,COPPER HEATPIPE, SINTERED, WATER,10.5mmX 12.86mmX600mm	Flat	38W @ 600mm	23.622in (600mm)	-	COPPER
126807	FLATTENED,COPPER HEATPIPE, SINTERED, WATER,11mmX 12.57mmX70mm	Flat	287W @ 70mm	2.756in (70mm)	-	COPPER
126808	FLATTENED,COPPER HEATPIPE, SINTERED, WATER,11mmX 12.57mmX100mm	Flat	247W @ 100mm	3.937in (100mm)	-	COPPER
126809	FLATTENED,COPPER HEATPIPE, SINTERED, WATER,11mmX 12.57mmX150mm	Flat	164W @ 150mm	5.906in (150mm)	-	COPPER
126810	FLATTENED,COPPER HEATPIPE, SINTERED, WATER,11mmX 12.57mmX200mm	Flat	123W @ 200mm	7.874in (200mm)	-	COPPER
126811	FLATTENED,COPPER HEATPIPE, SINTERED, WATER,11mmX 12.57mmX250mm	Flat	97W @ 250mm	9.843in (250mm)	-	COPPER
126812	FLATTENED,COPPER HEATPIPE, SINTERED, WATER,11mmX 12.57mmX300mm	Flat	88W @ 300mm	11.811in (300mm)	-	COPPER
126813	FLATTENED,COPPER HEATPIPE, SINTERED, WATER,11mmX 12.57mmX350mm	Flat	69W @ 350mm	13.78in (350mm)	-	COPPER
126814	FLATTENED,COPPER HEATPIPE, SINTERED, WATER,11mmX 12.57mmX400mm	Flat	61W @ 400mm	15.748in (400mm)	-	COPPER

Part #	Description	Shape	Power - Cooling	Length	Diameter	Material
126815	FLATTENED,COPPER HEATPIPE, SINTERED, WATER,11mmX 12.57mmX450mm	Flat	53W @ 450mm	17.717in (450mm)	-	COPPER
126816	FLATTENED,COPPER HEATPIPE, SINTERED, WATER,11mmX 12.57mmX500mm	Flat	48W @ 500mm	19.685in (500mm)	-	COPPER
126817	FLATTENED,COPPER HEATPIPE, SINTERED, WATER,11mmX 12.57mmX550mm	Flat	44W @ 550mm	21.654in (550mm)	-	COPPER
126818	FLATTENED,COPPER HEATPIPE, SINTERED, WATER,11mmX 12.57mmX600mm	Flat	40W @ 600mm	23.622in (600mm)	-	COPPER
126819	FLATTENED,COPPER HEATPIPE, SINTERED, WATER,11.5mmX 12.29mmX70mm	Flat	300W @ 70mm	2.756in (70mm)	-	COPPER
126820	FLATTENED,COPPER HEATPIPE, SINTERED, WATER,11.5mmX 12.29mmX100mm	Flat	258W @ 100mm	3.937in (100mm)	-	COPPER
126821	FLATTENED,COPPER HEATPIPE, SINTERED, WATER,11.5mmX 12.29mmX150mm	Flat	171W @ 150mm	5.906in (150mm)	-	COPPER
126822	FLATTENED,COPPER HEATPIPE, SINTERED, WATER,11.5mmX 12.29mmX200mm	Flat	128W @ 200mm	7.874in (200mm)	-	COPPER
126823	FLATTENED,COPPER HEATPIPE, SINTERED, WATER,11.5mmX 12.29mmX250mm	Flat	102W @ 250mm	9.843in (250mm)	-	COPPER
126824	FLATTENED,COPPER HEATPIPE, SINTERED, WATER,11.5mmX 12.29mmX300mm	Flat	85W @ 300mm	11.811in (300mm)	-	COPPER
126825	FLATTENED,COPPER HEATPIPE, SINTERED, WATER,11.5mmX 12.29mmX350mm	Flat	73W @ 350mm	13.78in (350mm)	-	COPPER
126826	FLATTENED,COPPER HEATPIPE, SINTERED, WATER,11.5mmX 12.29mmX400mm	Flat	64W @ 400mm	15.748in (400mm)	-	COPPER
126827	FLATTENED,COPPER HEATPIPE, SINTERED, WATER,11.5mmX 12.29mmX450mm	Flat	56W @ 450mm	17.717in (450mm)	-	COPPER
126828	FLATTENED,COPPER HEATPIPE, SINTERED, WATER,11.5mmX 12.29mmX500mm	Flat	50W @ 500mm	19.685in (500mm)	-	COPPER
126829	FLATTENED,COPPER HEATPIPE, SINTERED, WATER,11.5mmX 12.29mmX550mm	Flat	46W @ 550mm	21.654in (550mm)	-	COPPER
126830	FLATTENED,COPPER HEATPIPE, SINTERED, WATER,11.5mmX 12.29mmX600mm	Flat	42W @ 600mm	23.622in (600mm)	-	COPPER
120229	FLATTENED,COPPER HEATPIPE, SINTERED, WATER,1mmX 5mmX100mm	Flat	12W @ 100.00mm	3.937in (100mm)	-	COPPER
120231	FLATTENED,COPPER HEATPIPE, SINTERED, WATER,1.5mmX 6mmX100mm	Flat	25W @ 100.00mm	3.937in (100mm)	-	COPPER

COOLVATION
Innovative Thermal Solutions
COOLED BY WAKEFIELD THERMAL

5 STEP THERMAL ENGINEERING GUIDE
From Concept To Cooling

COOLVATION provides thermal management engineering services to improve products' thermal performance while applying cost effective solutions to eliminate unnecessary manufacturing costs. COOLVATION is a seamless resource extension for our customers' thermal & mechanical engineering teams from ideation to lab testing.

01 STEP — Customer Thermal Challenge
Physical limitations
Power constraints
Air flow/ fluid conditions
Environmental conditions
Component specifications
Define ideal state

02 STEP — Collaboration
Review conditions
Statement of work to customer
Historical consideration along with cutting edge technologies to provide cost effective solution

03 STEP — Execution
Concept analysis
(CFD-ansys/ ice pack, fin optimizations software)
Solid model
Analysis & verification
Cost analysis

04 STEP — Solution & Verification
Dedicated new product development center
Prototype
Physical thermal lab testing
Prove manufacturability

05 STEP — Global Manufacturing
Global manufacturing facilities
Global warehousing
Global labs to support future program

WakefieldThermal.com
603.635.2800