Data Sheet | Item Number: 232-134/005-000

Female connector for rail-mount terminal blocks; 0.6 x 1 mm pins; straight; Pin spacing 5 mm; 4-pole; gray

https://www.wago.com/232-134/005-000

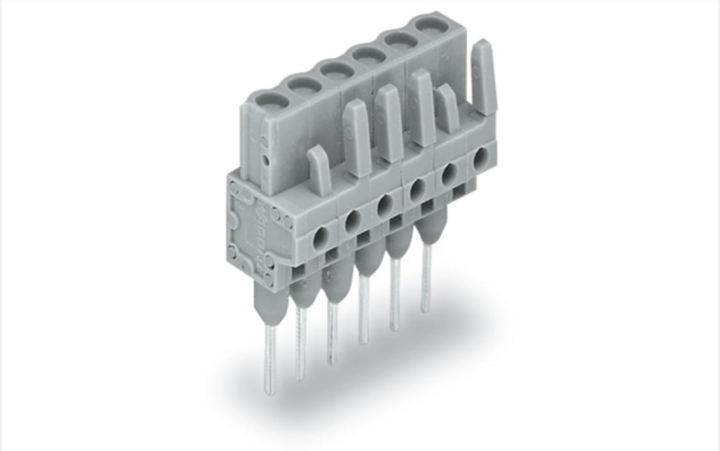

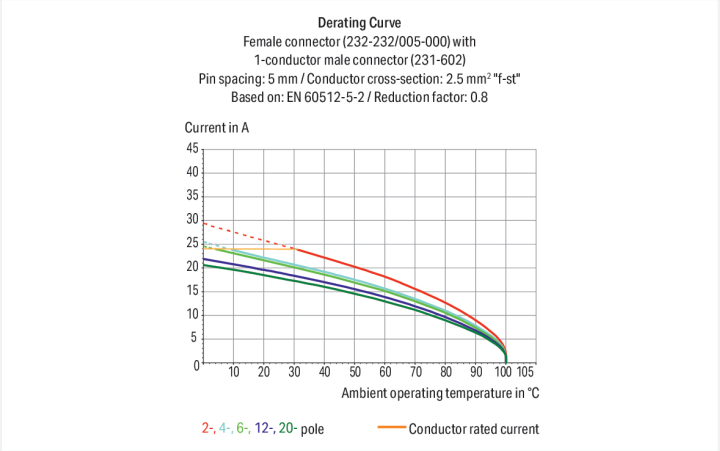

Color: gray

Similar to illustration

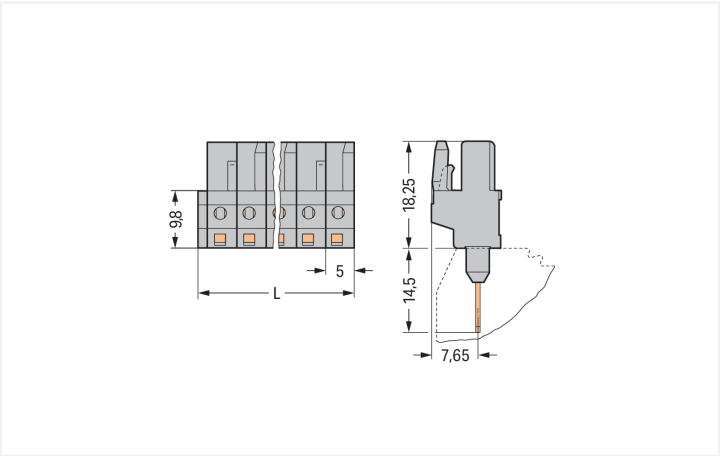

Dimensions in mm
L = (pole no. x pin spacing) + 1.5 mm2- to 3-pole female connectors – one latch only

Female connector, 232 Series, with 5 mm pin spacing

Enjoy seamless electrical installations with this female connector (item number 232-134/005-000). Dimensions: (21.5 x 32.75 x 11.6) mm (width x height x depth).

Tin is used for coating the contact surfaces.

- The right solution for every wiring task
- 4 connection points
- Pin spacing: 5 mm
- Permanently secure connections
- Wide range of applications thanks to a conductor cross-section range from 0.08 to 25 mm²

Notes

Safety information	The *MCS – MULTI CONNECTION SYSTEM* includes connectors without breaking capacity in accordance with DIN EN 61984. When used as intended, these connectors must not be connected/disconnected when live or under load.When used as intended, these connectors must not be connected/disconnected when live or under load. The circuit design should ensure header pins, which can be touched, are not live when unmated.
Variants:	Other pole numbers Other versions (or variants) can be requested from WAGO Sales or configured at https://configurator.wago.com/.

Electrical data

Ratings per	IEC/EN 60664-1		
Overvoltage category	III	III	II
Pollution degree	3	2	2
Nominal voltage	320 V	320 V	630 V
Rated impulse withstand voltage	4 kV	4 kV	4 kV
Rated current	12 A	12 A	12 A

Approvals per	UL 1059		
Use group	B	C	D
Rated voltage	300 V	-	300 V
Rated current	15 A	-	10 A

Approvals per	UL 1977
Rated voltage	600 V
Rated current	15 A

Approvals per	CSA		
Use group	B	C	D
Rated voltage	300 V	-	300 V
Rated current	15 A	-	10 A

Connection Data

Clamping units	4
Total number of potentials	4
Number of connection types	1
Number of levels	1

Connection 1

Number of poles	4

Physical data

Pin spacing	5 mm / 0.197 inches
Width	21.5 mm / 0.846 inches
Height	32.75 mm / 1.289 inches
Height from the surface	18.25 mm / 0.719 inches
Depth	11.6 mm / 0.457 inches

Mechanical data

Variable coding	Yes
Anti-rotation protection	Yes

Plug-in connection

Contact type (pluggable connector)	Female connector/socket
Connector (connection type)	for front-entry rail-mount terminal block
Mismating protection	No
Mating direction to the rail-mount terminal block	90 °

Continued on next page

Material data

Note (material data)	Information on material specifications can be found here
Color	gray
Material group	I
Insulation material (main housing)	Polyamide (PA66)
Flammability class per UL94	V0
Contact material	Copper alloy
Contact Plating	Tin
Fire load	0.07 MJ
Weight	4.2 g

Environmental requirements

Limit temperature range	-60 … +85 °C
Ambient temperature (installation)	-35 … +60 °C
Processing temperature	-35 … +60 °C

Commercial data

Product Group	3 (Multi Conn. System)
PU (SPU)	100 pcs
Packaging type	Box
Country of origin	DE
GTIN	4044918569552
Customs tariff number	85366990990

Product Classification

UNSPSC	39121409
eCl@ss 10.0	27-14-11-06
eCl@ss 9.0	27-14-11-06
ETIM 9.0	EC001284
ETIM 10.0	EC001284
ECCN	NO US CLASSIFICATION

Environmental Product Compliance

RoHS Compliance Status	Compliant,No Exemption

Approvals / Certificates

General approvals

Approval	Standard	Certificate Name
CB DEKRA Certification B.V.	IEC 61984	NL-113351
CSA DEKRA Certification B.V.	C22.2	1466354
KEMA/KEUR DEKRA Certification B.V.	EN 61984	71-130478 REV.1
UL Underwriters Laboratories Inc.	UL 1977	E45171
UL Underwriters Laboratories Inc.	UL 1059	UL-US-L45172-6187117-81111991-4

Approvals for marine applications

Approval	Standard	Certificate Name
BV Bureau Veritas S.A.	IEC 60998	11915/E0 BV

Continued on next page

Downloads

Environmental Product Compliance

Compliance Search

Environmental Product Compliance
232-134/005-000

Documentation

Additional Information

Technical Section	03.04.2019	pdf 2027.26 KB

CAD/CAE-Data

CAD data

2D/3D Models
232-134/005-000

CAE data

EPLAN Data Portal
232-134/005-000

ZUKEN Portal
232-134/005-000

1 Compatible Products

1.1 System counterpart

1.1.1 Male connector/plug



Item No.: 231-604
1-conductor male connector; CAGE CLAMP®; 2.5 mm²; Pin spacing 5 mm; 4-pole; gray

1.2 Optional Accessories

1.2.1 Test and measurement

1.2.1.1 Testing accessories



Item No.: 231-661
Test plugs for female connectors; for 5 mm and 5.08 mm pin spacing; 2,50 mm²; light gray