# Data Sheet | Item Number: 221-512/000-004

Mounting carrier; for 2-conductor terminal blocks; 221 Series - 4 mm²; with snap-in mounting foot for horizontal mounting; black

https://www.wago.com/221-512/000-004

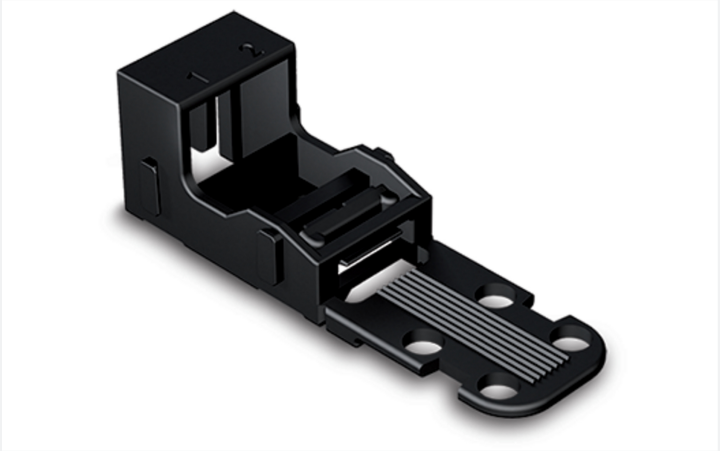

Color: ■ black

Similar to illustration

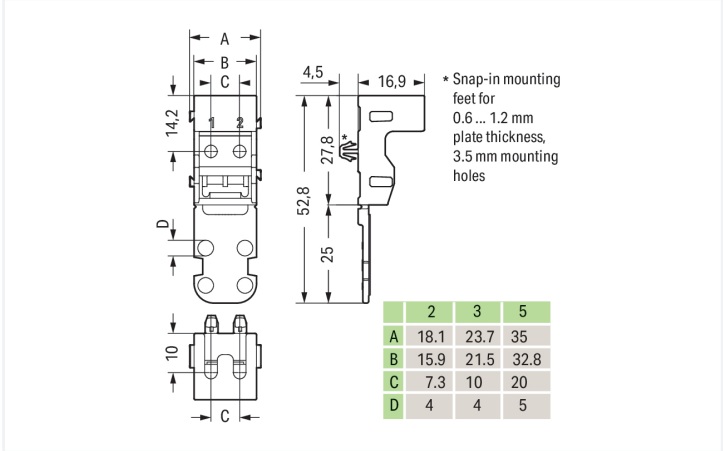


| | 2 | 3 | 5 |
|---|---|---|---|
| A | 18.1 | 23.7 | 35 |
| B | 15.9 | 21.5 | 32.8 |
| C | 7.3 | 10 | 20 |
| D | 4 | 4 | 5 |

Dimensions in mm

## Physical data

| | |
|---|---|
| Width | 18.1 mm / 0.713 inches |
| Height | 21.4 mm / 0.843 inches |
| Height from the surface | 16.9 mm / 0.665 inches |
| Depth | 52.8 mm / 2.079 inches |

## Mechanical data

| | |
|---|---|
| Mounting type | with snap-in mounting foot for horizontal mounting |
| Suitable | for 2-wire connectors (4 mm²) |

## Material data

| | |
|---|---|
| Note (material data) | Information on material specifications can be found here |
| Color | black |
| Material group | I |
| Insulation material (main housing) | Polyamide (PA66) |
| Flammability class per UL94 | V0 |
| Fire load | 0.075 MJ |
| Weight | 2.8 g |

## Environmental requirements

| | |
|---|---|
| Relative humidity during storage and transportation | 20 … 95 % |
| Ambient temperature (installation) | -35 … +60 °C |

## Commercial data

| | |
|---|---|
| PU (SPU) | 50 (10) pcs |
| Packaging type | Box |
| Country of origin | CN |
| GTIN | 4055143595872 |
| Customs tariff number | 39269097900 |

## Product Classification

| | |
|---|---|
| UNSPSC | 39121421 |
| eCl@ss 10.0 | 27-14-11-92 |
| eCl@ss 9.0 | 27-14-11-92 |
| ETIM 9.0 | EC002848 |
| ETIM 10.0 | EC002848 |
| ECCN | NO US CLASSIFICATION |

## Environmental Product Compliance

| | |
|---|---|
| RoHS Compliance Status | Compliant,No Exemption |

## Downloads

### Environmental Product Compliance

**Compliance Search**

Environmental Product Compliance
221-512/000-004

### Documentation

**Bid Text**

| | | | |
|---|---|---|---|
| 221-512/000-004 | 19.02.2019 | xml<br>2.74 KB | |
| 221-512/000-004 | 04.01.2018 | docx<br>14.14 KB | |

### CAD/CAE-Data

**CAD data**

2D/3D Models
221-512/000-004

**CAE data**

ZUKEN Portal
221-512/000-004


Continued on next page

## 1 Compatible Products

### 1.1 Optional Accessories

#### 1.1.1 Marking

##### 1.1.1.1 Marking strip



Item No.: 210-833
Marking strips; 25 m on roll; 6 mm wide; plain; Self-adhesive; white

## Installation Notes



Inserting a connector into the mounting carrier.

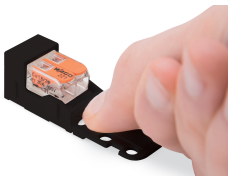

Removing a connector from the mounting carrier.

## Conductor termination



Inserting a conductor.



Horizontal screw mounting



Vertical screw mounting



Horizontal mounting via snap-in foot



Vertical mounting via snap-in foot

## Strain relief



Use a cable tie to secure the conductors to the strain relief plate.



The strain relief plate can be removed.


Continued on next page

## Testing

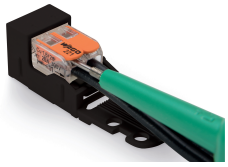

Testing a connector mounted on the carrier via test slot.

## Application



Connecting a light to the mains.

## Marking

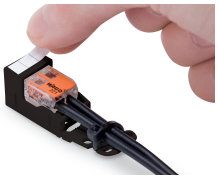

Labeling the mounting carrier.